Sales Code: LFL1822C

Barcode: 5056817772420

Brand: nuie Lux

Description: nuie lux Flume 600mm Autumn Oak 1 Drawer Wall Hung Vanity Unit With 1 Tap Hole Square Basin With Worktop



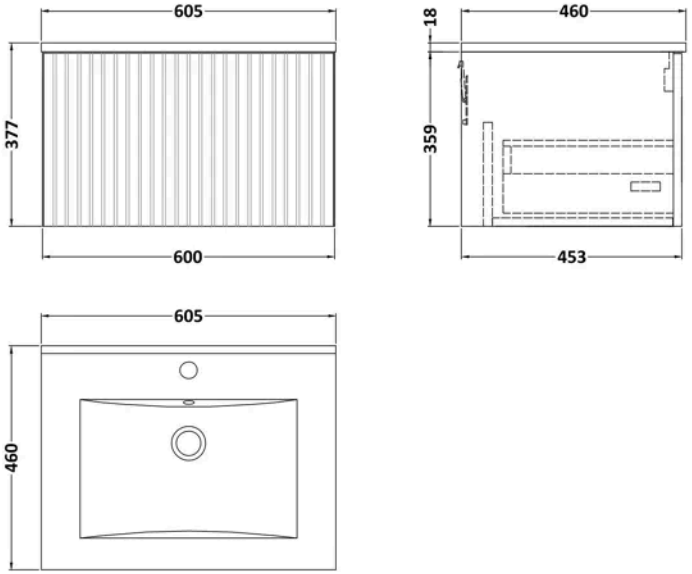

Product Dimensions

Product	377 x 605 x 460mm (H x W x D)
Packaged	377 x 605 x 460mm (H x W x D)
Nett Weight	25.5 kg
Packaged Weight	25.5 kg

Product Details

Country of Origin	United Kingdom
Product Material	Mfc Textured Woodgrain,Vitreous China
Colour/Finish	Autumn Oak
Mount Type	Floor
Style	Contemporary
Construction Method	Cam & Wood Dowel
Construction Type	Rigid
Fascia Finish	Mdf Vinyl Textured Woodgrain
Handles Included	No
Inner Bowl Height	120 mm
Material Thickness	18 mm
No. Drawers	1
No. Of Tapholes	1
Number Of Bowls	1
Overflow Included	Yes
Tap Included	No
Waste Included	No

© ROXOR Group

Sales Code: LFL1822 **Barcode:** 5056817712235 **Brand:** nuie Lux **Description:** nuie lux Flume 600mm Autumn Oak 1 Drawer Vanity Unit



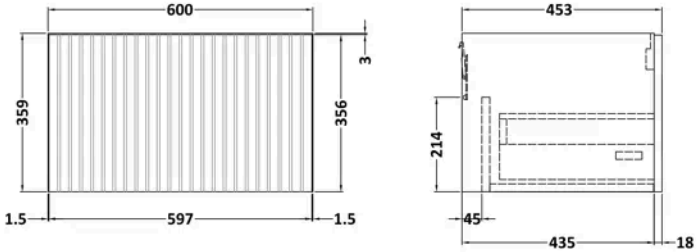

Product Dimensions

Product	359 x 600 x 455mm (H x W x D)
Packaged	380 x 620 x 405mm (H x W x D)
Nett Weight	12.5 kg
Packaged Weight	13 kg

Product Details

Country of Origin	United Kingdom
Product Material	Mfc Textured Woodgrain
Colour/Finish	Autumn Oak
Mount Type	Floor
Style	Contemporary
Construction Method	Cam & Wood Dowel
Construction Type	Rigid
Drawer Type	80mm High Metal S/C Inc Gallery
Fascia Finish	Mdf Vinyl Textured Woodgrain
Handles Included	No
Material Thickness	18 mm
No. Drawers	1
Waste Shroud	Yes

© ROXOR Group

Sales Code: LX9060E **Barcode:** 5056817727918 **Brand:** nuie Lux **Description:** nuie lux 1 Tap Hole 600mm Ceramic Minimalist Rectangular Basin



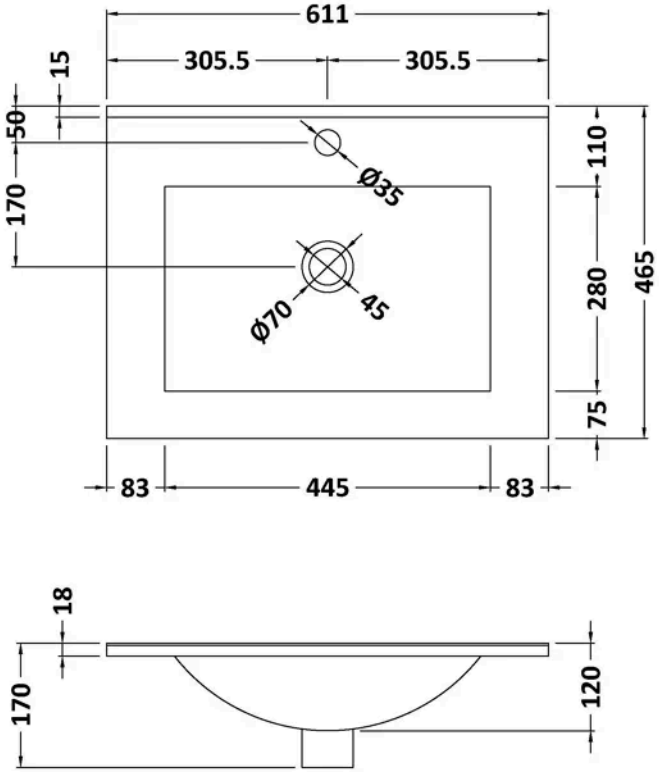

Product Dimensions

Product	170 x 611 x 465mm (H x W x D)
Packaged	195 x 625 x 480mm (H x W x D)
Nett Weight	12 kg
Packaged Weight	12.5 kg

Packaging Details

Label Size (mm)	100 x 50
Label Colour	White
Label Qty	2.0000

Product Details

Country of Origin	China
Product Material	Vitreous China
Colour/Finish	White
Style	Contemporary
Fixings Included	No
Bottle Trap Included	No
Ce Certified	Yes
Inner Bowl Depth	285 mm
Inner Bowl Height	120 mm
Inner Bowl Width	410 mm
No. Of Tapholes	1
Number Of Bowls	1
Overflow Cover Included	No
Overflow Included	Yes
Tap Included	No
Waste Included	No

© ROXOR Group