Sales Code: LFL1805E

Barcode: 5056817771041

Brand: nuie Lux

Description: nuie lux Flume 800mm Autumn Oak 2 Door Floor Standing Vanity Unit With 1 Tap Hole Basin



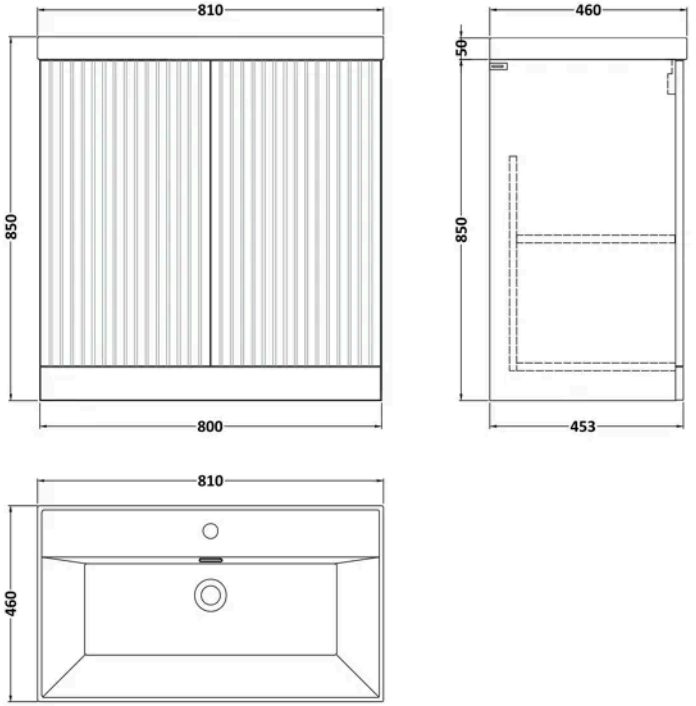

Product Dimensions

Product	850 x 805 x 460mm (H x W x D)
Packaged	850 x 805 x 460mm (H x W x D)
Nett Weight	44 kg
Packaged Weight	44 kg

Product Details

Country of Origin	United Kingdom
Product Material	Mfc Textured Woodgrain,Vitreous China
Colour/Finish	Autumn Oak
Mount Type	Floor
Style	Contemporary
Construction Method	Cam & Wood Dowel
Construction Type	Rigid
Fascia Finish	Mdf Vinyl Textured Woodgrain
Handles Included	No
Inner Bowl Height	98 mm
Material Thickness	18 mm
No. Doors	2
No. Of Tapholes	1
No. Shelves	1
Number Of Bowls	1
Number Of Shelves	1
Overflow Included	Yes
Tap Included	No
Waste Included	No

© ROXOR Group

Sales Code: LFL1805 **Barcode:** 5056817713393 **Brand:** nuie Lux **Description:** nuie lux Flume 800mm Autumn Oak 2 Door Floor Standing Vanity Unit



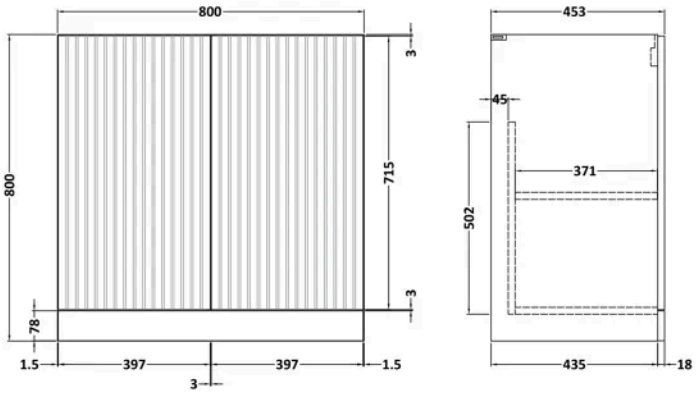

Product Dimensions

Product	800 x 800 x 455mm (H x W x D)
Packaged	820 x 820 x 405mm (H x W x D)
Nett Weight	25.5 kg
Packaged Weight	26 kg

Packaging Details

Box Qty	1

Product Details

Country of Origin	United Kingdom
Product Material	Mfc Textured Woodgrain
Colour/Finish	Autumn Oak
Mount Type	Floor
Style	Contemporary
Construction Method	Cam & Wood Dowel
Construction Type	Rigid
Fascia Finish	Mdf Vinyl Textured Woodgrain
Handles Included	No
Material Thickness	18 mm
No. Doors	2
No. Shelves	1
Number Of Shelves	1
Waste Shroud	No

© ROXOR Group

Sales Code: LXNM065 **Barcode:** 5056817727949 **Brand:** nuie Lux **Description:** nuie lux 1 Tap Hole 800mm Thin Edge Ceramic Basin



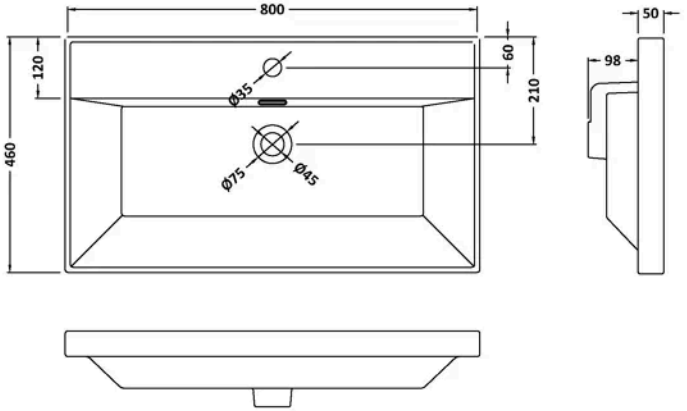

Product Dimensions

Product	148 x 800 x 460mm (H x W x D)
Packaged	170 x 825 x 480mm (H x W x D)
Nett Weight	17.5 kg
Packaged Weight	18 kg

Packaging Details

Box Qty	1
Label Size (mm)	100 x 50
Label Colour	White
Label Qty	2.0000

Product Details

Country of Origin	China
Product Material	Vitreous China
Colour/Finish	White
Style	Contemporary
Fixings Included	No
Bottle Trap Included	No
Ce Certified	Yes
Inner Bowl Depth	270 mm
Inner Bowl Height	125 mm
Inner Bowl Width	600 mm
No. Of Tapholes	1
Number Of Bowls	1
Overflow Cover Included	No
Overflow Included	Yes
Tap Included	No
Waste Included	No

© ROXOR Group