Sales Code: LFL1805C

Barcode: 5056817771034

Brand: nuie Lux

Description: nuie lux Flume 800mm Autumn Oak 2 Door Floor Standing Vanity Unit With 1 Tap Hole Basin With Worktop



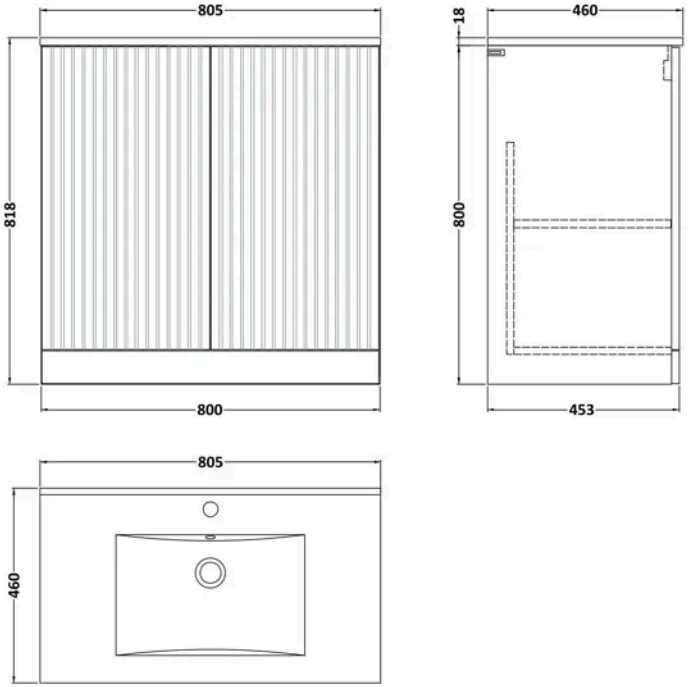

Product Dimensions

Product	818 x 805 x 460mm (H x W x D)
Packaged	818 x 805 x 460mm (H x W x D)
Nett Weight	43.5 kg
Packaged Weight	43.5 kg

Product Details

Country of Origin	United Kingdom
Product Material	Mfc Textured Woodgrain,Vitreous China
Colour/Finish	Autumn Oak
Mount Type	Floor
Style	Contemporary
Construction Method	Cam & Wood Dowel
Construction Type	Rigid
Fascia Finish	Mdf Vinyl Textured Woodgrain
Handles Included	No
Inner Bowl Height	120 mm
Material Thickness	18 mm
No. Doors	2
No. Of Tapholes	1
No. Shelves	1
Number Of Bowls	1
Number Of Shelves	1
Overflow Included	Yes
Tap Included	No
Waste Included	No

© ROXOR Group

Sales Code: LFL1805 **Barcode:** 5056817713393 **Brand:** nuie Lux **Description:** nuie lux Flume 800mm Autumn Oak 2 Door Floor Standing Vanity Unit



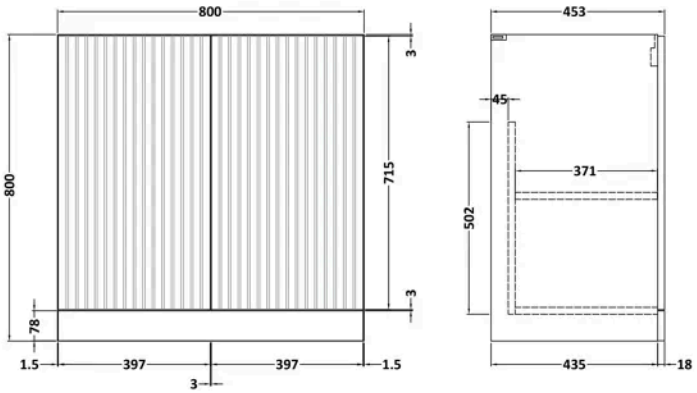

Product Dimensions

Product	800 x 800 x 455mm (H x W x D)
Packaged	820 x 820 x 405mm (H x W x D)
Nett Weight	25.5 kg
Packaged Weight	26 kg

Packaging Details

Box Qty	1

Product Details

Country of Origin	United Kingdom
Product Material	Mfc Textured Woodgrain
Colour/Finish	Autumn Oak
Mount Type	Floor
Style	Contemporary
Construction Method	Cam & Wood Dowel
Construction Type	Rigid
Fascia Finish	Mdf Vinyl Textured Woodgrain
Handles Included	No
Material Thickness	18 mm
No. Doors	2
No. Shelves	1
Number Of Shelves	1
Waste Shroud	No

© ROXOR Group

Sales Code: LX9080E **Barcode:** 5056817727925 **Brand:** nuie Lux **Description:** nuie lux 1 Tap Hole 800mm Ceramic Minimalist Rectangular Basin



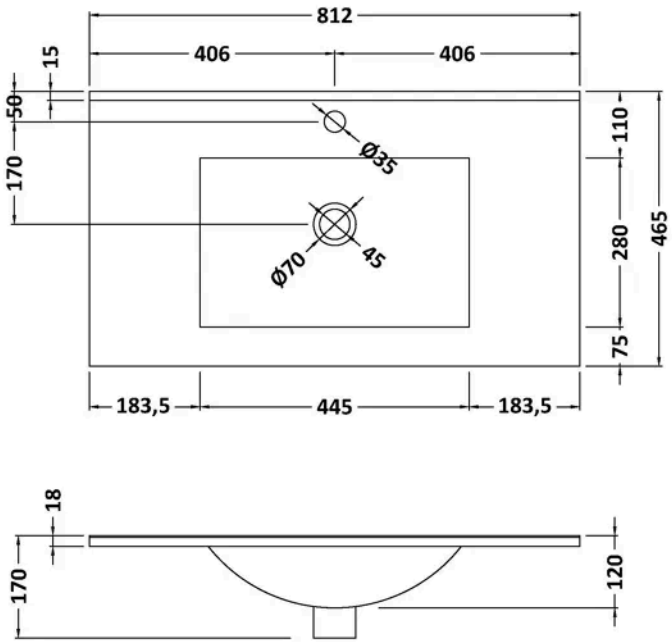

Product Dimensions

Product	170 x 812 x 465mm (H x W x D)
Packaged	195 x 825 x 480mm (H x W x D)
Nett Weight	17 kg
Packaged Weight	17.5 kg

Packaging Details

Box Qty	1
Label Size (mm)	100 x 50
Label Colour	White
Label Qty	2.0000

Product Details

Country of Origin	China
Product Material	Vitreous China
Colour/Finish	White
Style	Contemporary
Fixings Included	No
Bottle Trap Included	No
Ce Certified	Yes
Inner Bowl Height	120 mm
No. Of Tapholes	1
Number Of Bowls	1
Overflow Cover Included	No
Overflow Included	Yes
Tap Included	No
Waste Included	No
Waste Size Required	1.5" (70mm flange)

© ROXOR Group