**Sales Code:** LFL1426WS1

**Barcode:** 5056817775858

**Brand:** nuie Lux

**Description:** nuie lux Flume 800mm Soft Black 2 Drawer Wall Hung Vanity Unit With 1 Tap Hole Marble Worktop



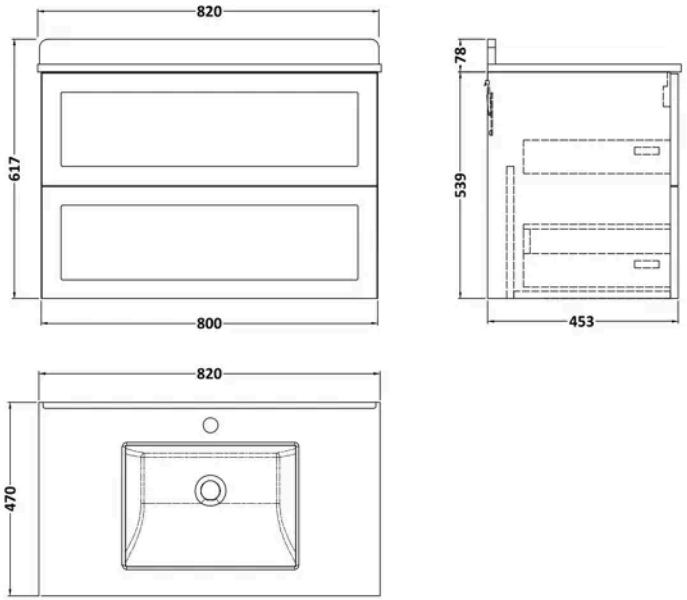


## Product Dimensions

| | |
|---|---|
| Product | 553 x 805 x 460mm (H x W x D) |
| Packaged | 553 x 805 x 460mm (H x W x D) |
| Nett Weight | 45 kg |
| Packaged Weight | 45 kg |

## Product Details

| | |
|---|---|
| Country of Origin | United Kingdom |
| Product Material | Mfc Smooth Matt,Vitreous China |
| Colour/Finish | Soft Black |
| Mount Type | Wall Hung |
| Style | Contemporary |
| Construction Method | Cam & Wood Dowel |
| Construction Type | Rigid |
| Fascia Finish | Mdf Vinyl Smooth Matt |
| Handles Included | No |
| Inner Bowl Height | 160 mm |
| Material Thickness | 18 mm |
| No. Drawers | 2 |
| No. Of Tapholes | 1 |
| Number Of Bowls | 1 |
| Overflow Included | No |
| Tap Included | No |
| Waste Included | No |

© ROXOR Group

**Sales Code:** LFL1426 **Barcode:** 5056817712174 **Brand:** nuie Lux **Description:** nuie lux Flume 800mm Soft Black 2 Drawer Wall Hung Vanity Unit

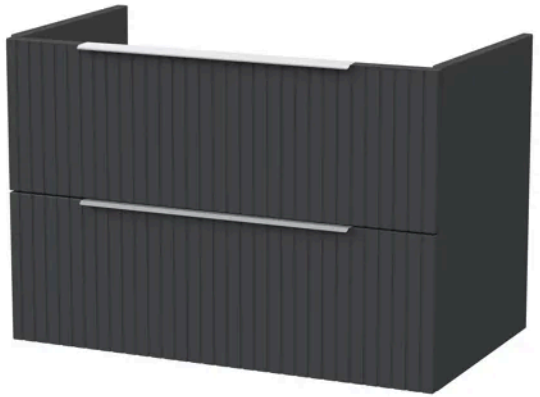

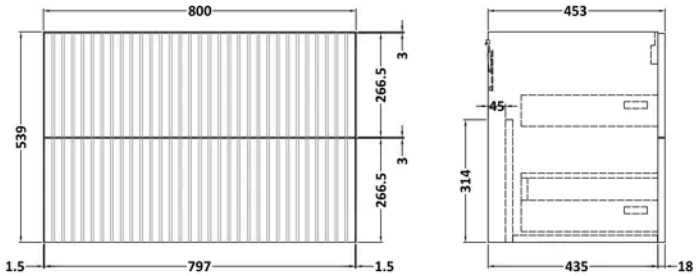


## Product Dimensions

| | |
|---|---|
| Product | 539 x 800 x 455mm (H x W x D) |
| Packaged | 560 x 820 x 405mm (H x W x D) |
| Nett Weight | 23.5 kg |
| Packaged Weight | 24 kg |

## Packaging Details

| | |
|---|---|
| Box Qty | 1 |

## Product Details

| | |
|---|---|
| Country of Origin | United Kingdom |
| Product Material | Mfc Smooth Matt |
| Colour/Finish | Soft Black |
| Mount Type | Wall Hung |
| Style | Contemporary |
| Construction Method | Cam & Wood Dowel |
| Construction Type | Rigid |
| Drawer Type | 80mm High Metal S/C Inc Gallery |
| Fascia Finish | Mdf Vinyl Smooth Matt |
| Handles Included | No |
| Material Thickness | 18 mm |
| No. Drawers | 2 |
| Waste Shroud | Yes |

© ROXOR Group

**Sales Code:** LXMB228 **Barcode:** 5056817728205 **Brand:** nuie Lux **Description:** nuie lux 1 Tap Hole 800mm White Single Square Bowl Marble Worktop Basin



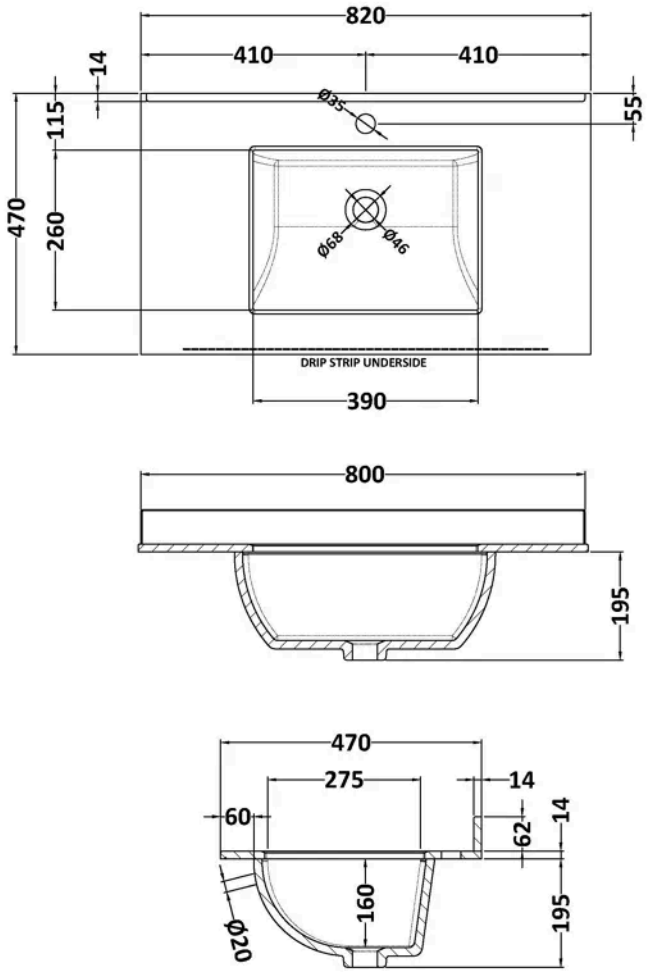


## Product Dimensions

| | |
|---|---|
| Product | 209 x 820 x 463mm (H x W x D) |
| Packaged | 250 x 900 x 580mm (H x W x D) |
| Nett Weight | 20.5 kg |
| Packaged Weight | 21 kg |

## Packaging Details

| | |
|---|---|
| Box Qty | 1 |
| Label Size (mm) | 50 x 100 |
| Label Colour | White |
| Label Qty | 2.0000 |

## Product Details

| | |
|---|---|
| Country of Origin | China |
| Product Material | Vitreous China |
| Colour/Finish | White |
| Style | Traditional |
| Bottle Trap Included | No |
| Ce Certified | Yes |
| Inner Bowl Depth | 275 mm |
| Inner Bowl Height | 160 mm |
| Inner Bowl Width | 390 mm |
| No. Of Tapholes | 1 |
| Number Of Bowls | 1 |
| Overflow Cover Included | No |
| Overflow Included | Yes |
| Tap Included | No |
| Waste Included | No |

© ROXOR Group