Sales Code: LFL1425B

Barcode: 5056817774837

Brand: nuie Lux

Description: nuie lux Flume 800mm Soft Black 1 Drawer Wall Hung Vanity Unit With 3 Tap Holes Fireclay Basin



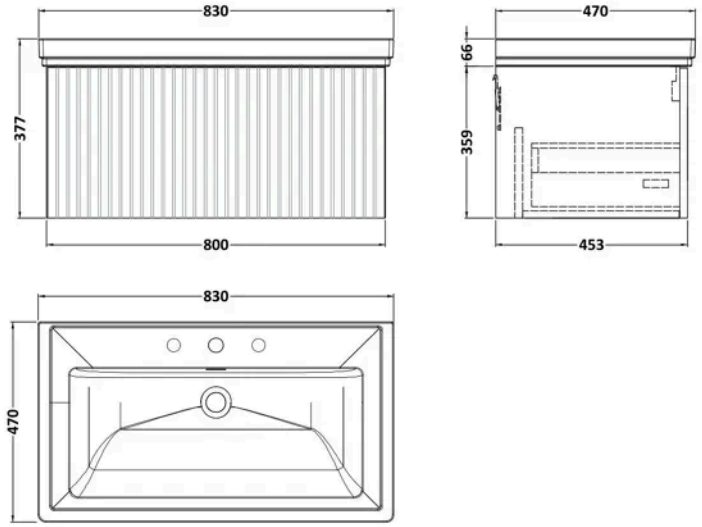

Product Dimensions

Product	425 x 805 x 460mm (H x W x D)
Packaged	425 x 805 x 460mm (H x W x D)
Nett Weight	38.5 kg
Packaged Weight	38.5 kg

Product Details

Country of Origin	United Kingdom
Product Material	Fireclay,Mfc Smooth Matt
Colour/Finish	Soft Black
Mount Type	Wall Hung
Style	Contemporary
Construction Method	Cam & Wood Dowel
Construction Type	Rigid
Fascia Finish	Mdf Vinyl Smooth Matt
Handles Included	No
Inner Bowl Height	134 mm
Material Thickness	18 mm
No. Drawers	1
No. Of Tapholes	3
Number Of Bowls	1
Overflow Included	Yes
Tap Included	No
Waste Included	No

© ROXOR Group

Sales Code: LFL1425 **Barcode:** 5056817712150 **Brand:** nuie Lux **Description:** nuie lux Flume 800mm Soft Black 1 Drawer Wall Hung Vanity Unit

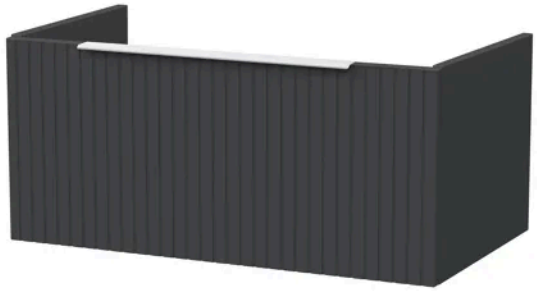

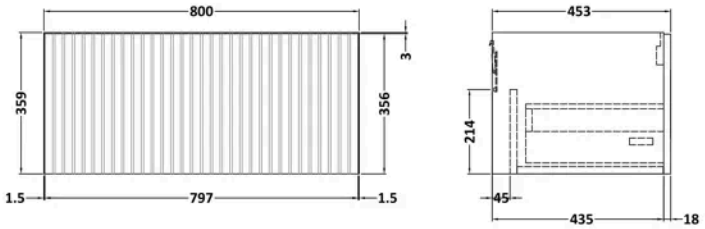

Product Dimensions

Product	359 x 800 x 455mm (H x W x D)
Packaged	380 x 820 x 405mm (H x W x D)
Nett Weight	16.5 kg
Packaged Weight	17 kg

Packaging Details

Box Qty	1

Product Details

Country of Origin	United Kingdom
Product Material	Mfc Smooth Matt
Colour/Finish	Soft Black
Mount Type	Wall Hung
Style	Contemporary
Construction Method	Cam & Wood Dowel
Construction Type	Rigid
Drawer Type	80mm High Metal S/C Inc Gallery
Fascia Finish	Mdf Vinyl Smooth Matt
Handles Included	No
Material Thickness	18 mm
No. Drawers	1
Waste Shroud	Yes

© ROXOR Group

Sales Code: LXCB535 **Barcode:** 5056817728007 **Brand:** nuie Lux **Description:** nuie lux 3 Tap Hole 800mm Traditional Fireclay Basin



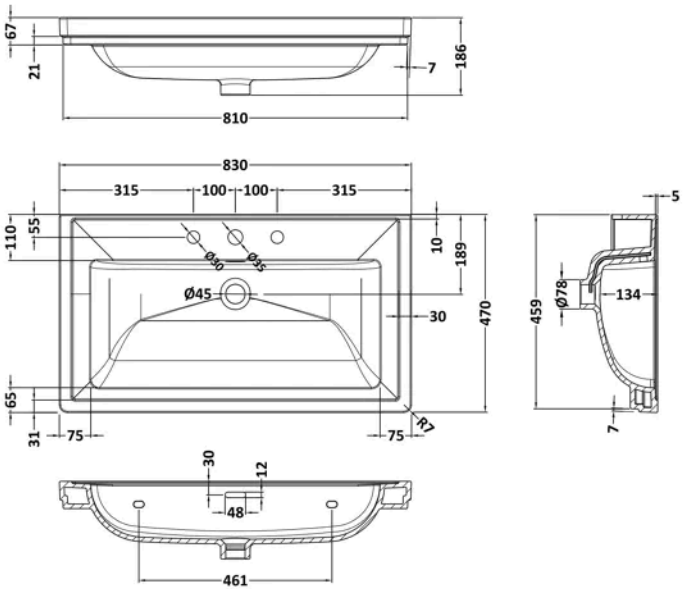

Product Dimensions

Product	186 x 830 x 470mm (H x W x D)
Packaged	490 x 850 x 220mm (H x W x D)
Nett Weight	21.5 kg
Packaged Weight	21.5 kg

Packaging Details

Box Qty	1
Label Size (mm)	50 x 100
Label Colour	White
Label Qty	2.0000

Product Details

Country of Origin	United Arab Emirates
Product Material	Fireclay
Colour/Finish	White
Style	Contemporary
Bottle Trap Included	No
Ce Certified	Yes
Inner Bowl Depth	295 mm
Inner Bowl Height	134 mm
Inner Bowl Width	680 mm
No. Of Tapholes	3
Number Of Bowls	1
Overflow Cover Included	No
Overflow Included	Yes
Tap Included	No
Waste Included	No

© ROXOR Group