Sales Code: LFL105Q **Barcode:** 5056883751473 **Brand:** nuie Lux **Description:** nuie lux Flume Matt White 800mm Floor Standing 2-Door Unit & Stone Basin 1TH



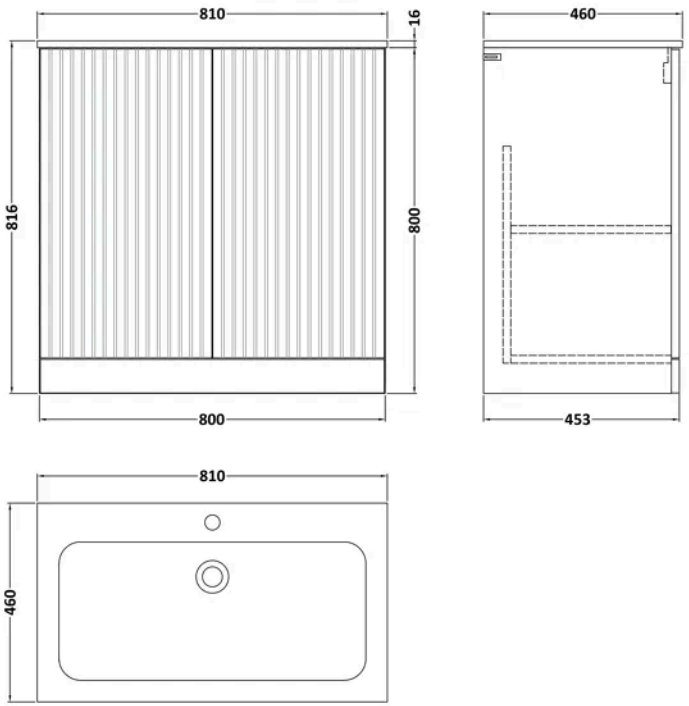

Product Dimensions

Product	816 x 810 x 460mm (H x W x D)
Packaged	550 x 550 x 550mm (H x W x D)
Nett Weight	42.5 kg
Packaged Weight	42.5 kg

Product Details

Country of Origin	United Kingdom
Product Material	Mfc Smooth Matt,Stone
Colour/Finish	Matt White
Mount Type	Floor
Style	Contemporary
Construction Method	Cam & Wood Dowel
Construction Type	Rigid
Fascia Finish	Mdf Vinyl Smooth Matt
Handles Included	No
Inner Bowl Height	128 mm
Leg Set Included	No
Material Thickness	18 mm
No. Doors	2
No. Of Tapholes	1
Number Of Bowls	1
Overflow Cover Included	Yes
Overflow Included	Yes
Tap Included	No
Waste Included	No

© ROXOR Group

Sales Code: LFL105 **Barcode:** 5056817713379 **Brand:** nuie Lux **Description:** nuie lux Flume Matt White 800mm 2 Door Floor Standing Vanity Unit

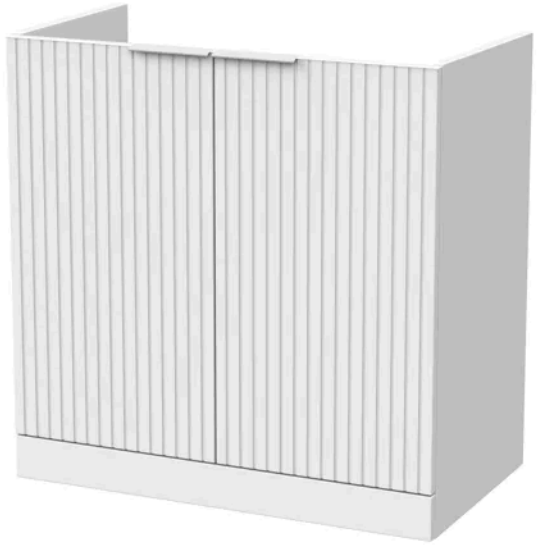

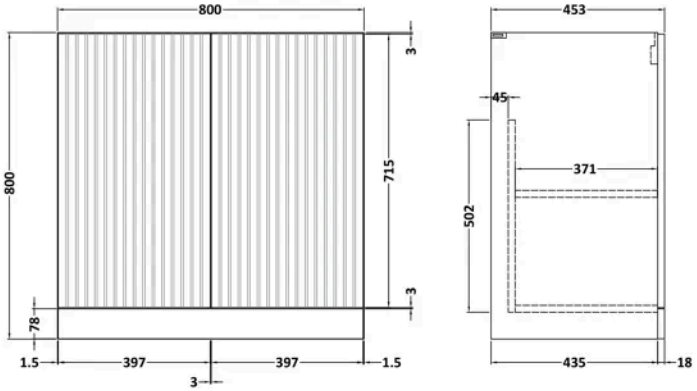

Product Dimensions

Product	800 x 800 x 455mm (H x W x D)
Packaged	820 x 820 x 405mm (H x W x D)
Nett Weight	25.5 kg
Packaged Weight	26 kg

Packaging Details

Box Qty	1

Product Details

Country of Origin	United Kingdom
Product Material	Mfc Smooth Matt
Colour/Finish	Matt White
Mount Type	Floor
Style	Contemporary
Construction Method	Cam & Wood Dowel
Construction Type	Rigid
Fascia Finish	Mdf Vinyl Smooth Matt
Handles Included	No
Material Thickness	18 mm
No. Doors	2
No. Shelves	1
Number Of Shelves	1
Waste Shroud	No

© ROXOR Group

Sales Code: LXSB905 **Barcode:** 5056883750483 **Brand:** nuie Lux **Description:** 810 x 460mm Basin 1T/H



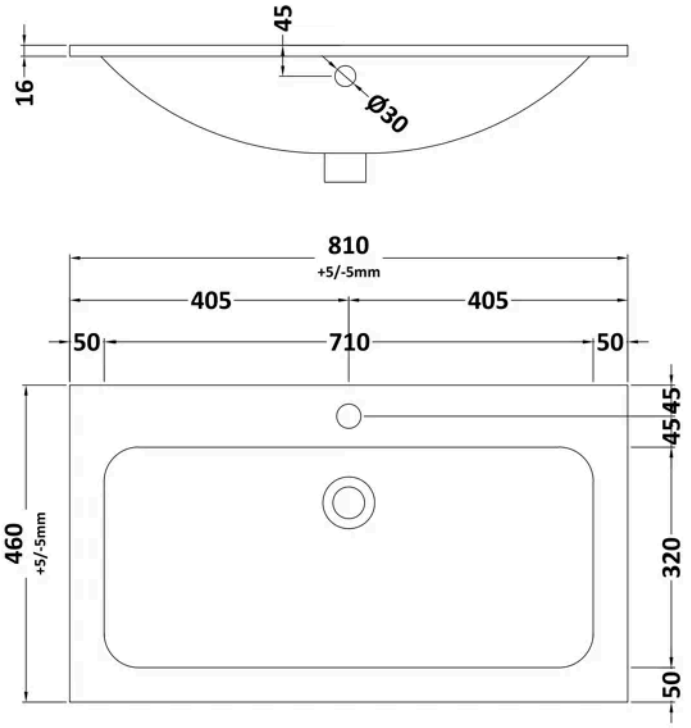

Product Dimensions

Product	810 x 460mm (W x D)
Packaged	200 x 875 x 530mm (H x W x D)
Nett Weight	16 kg
Packaged Weight	16.5 kg

Packaging Details

Box Qty	1

Product Details

Country of Origin	China
Product Material	Stone
Colour/Finish	Carrera Marble
Style	Contemporary
Bottle Trap Included	No
Ce Certified	Yes
Inner Bowl Depth	320 mm
Inner Bowl Height	128 mm
Inner Bowl Width	710 mm
No. Of Tapholes	1
Number Of Bowls	1
Overflow Cover Included	Yes
Overflow Included	Yes
Tap Included	No
Waste Included	No

© ROXOR Group