Sales Code: LFL105LBG

Barcode: 5056817770440

Brand: nuie Lux

Description: nuie lux Flume 800mm Matt White 2 Door Floor Standing Vanity Unit With Bellato Grey Worktop

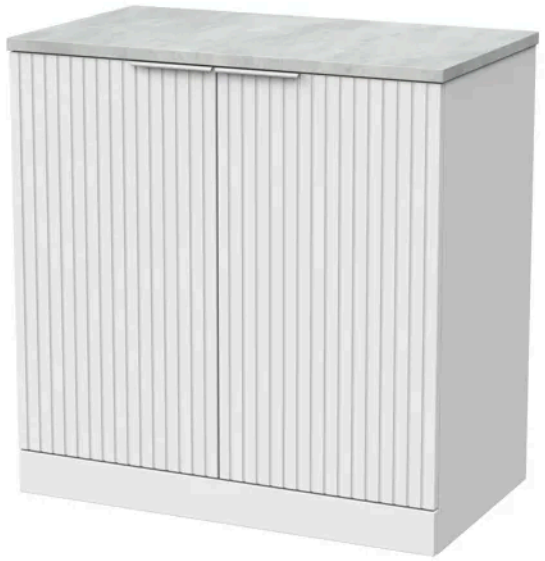

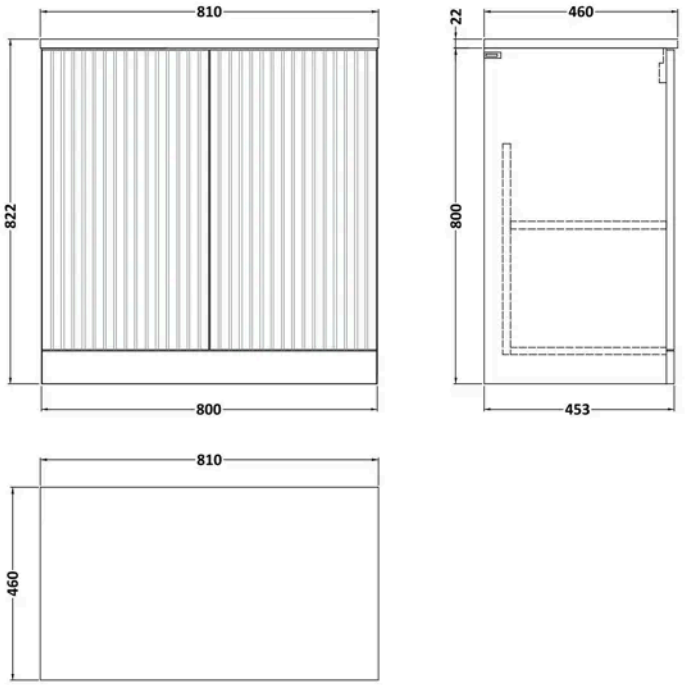

Product Dimensions

Product	818 x 805 x 460mm (H x W x D)
Packaged	550 x 550 x 550mm (H x W x D)
Nett Weight	29 kg
Packaged Weight	29 kg

Product Details

Country of Origin	United Kingdom
Product Material	Mfc Laminated,Mfc Smooth Matt
Colour/Finish	Matt White
Mount Type	Floor
Style	Contemporary
Construction Method	Cam & Wood Dowel
Construction Type	Rigid
Fascia Finish	Mdf Vinyl Smooth Matt
Handles Included	No
Material Thickness	18 mm
No. Doors	2
No. Shelves	1
Number Of Shelves	1

© ROXOR Group

Sales Code: LFL105 **Barcode:** 5056817713379 **Brand:** nuie Lux **Description:** nuie lux Flume 800mm Matt White 2 Door Floor Standing Vanity Unit

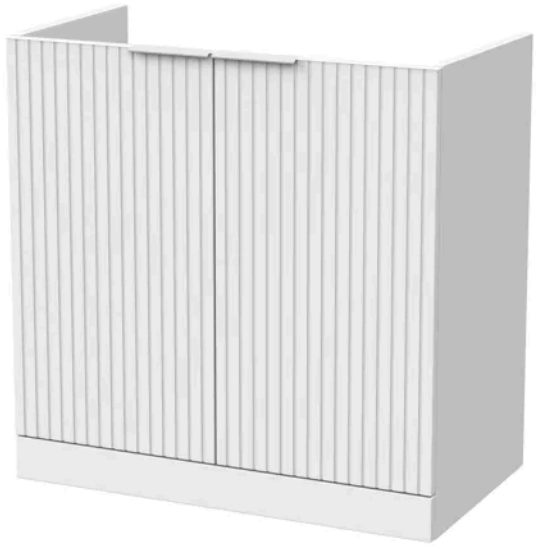

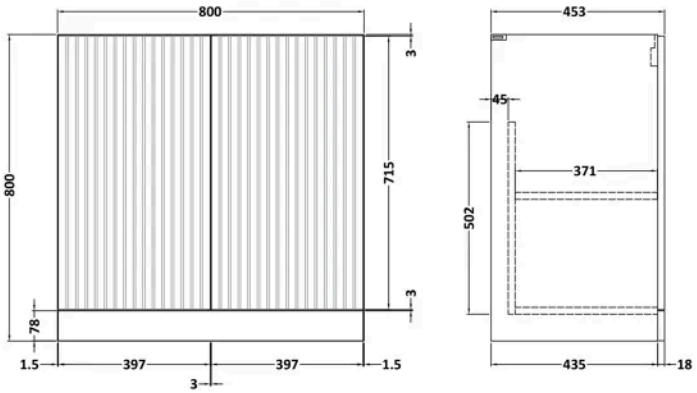

Product Dimensions

Product	800 x 800 x 455mm (H x W x D)
Packaged	820 x 820 x 405mm (H x W x D)
Nett Weight	25.5 kg
Packaged Weight	26 kg

Packaging Details

Box Qty	1

Product Details

Country of Origin	United Kingdom
Product Material	Mfc Smooth Matt
Colour/Finish	Matt White
Mount Type	Floor
Style	Contemporary
Construction Method	Cam & Wood Dowel
Construction Type	Rigid
Fascia Finish	Mdf Vinyl Smooth Matt
Handles Included	No
Material Thickness	18 mm
No. Doors	2
No. Shelves	1
Number Of Shelves	1
Waste Shroud	No

© ROXOR Group

Sales Code: LX8046BG **Barcode:** 5056817726256 **Brand:** nuie Lux **Description:** nuie lux 805 x 460mm Bellato Grey Laminate Worktop



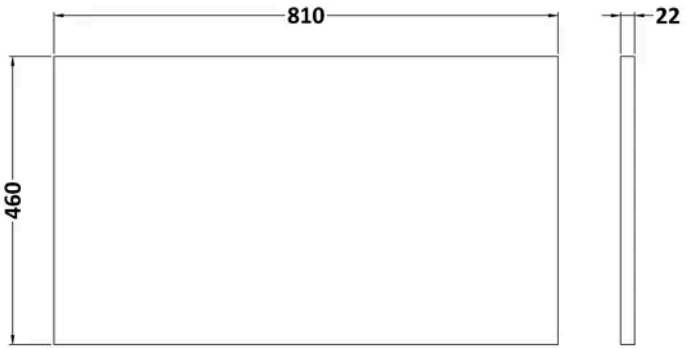

Product Dimensions

Product	22 x 805 x 460mm (H x W x D)
Packaged	20 x 520 x 810mm (H x W x D)
Nett Weight	3 kg
Packaged Weight	3 kg

Packaging Details

Box Qty	1

Product Details

Country of Origin	United Kingdom
Product Material	Mfc Laminated
Colour/Finish	Bellato Grey
Style	Contemporary

© ROXOR Group