Sales Code: KSB65CS **Barcode:** 5056474592553 **Brand:** Arley Pro **Description:** Arley Pro Kass Soft Black 600mm Floor Standing Vanity Unit With Basin



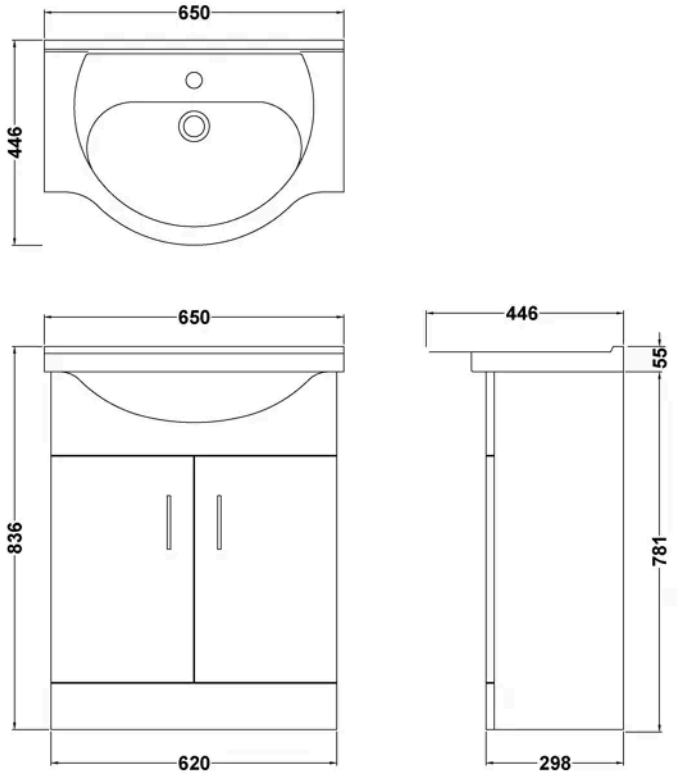

Product Dimensions

Product	185 x 650 x 446mm (H x W x D)
Packaged	325 x 645 x 815mm (H x W x D)
Nett Weight	36.68 kg
Packaged Weight	36.68 kg

Product Details

Country of Origin	China
Product Material	Mfc Painted Matt
Colour/Finish	Soft Black
Mount Type	Floor
Style	Contemporary
Construction Method	Cam & Wood Dowel
Construction Type	Flat-Pack
Fascia Finish	Mdf Painted Matt
Handles Included	Yes
Inner Bowl Height	115 mm
Material Thickness	18 mm
No. Doors	2
No. Of Tapholes	1
Number Of Bowls	1
Overflow Included	Yes
Tap Included	No

© ROXOR Group

Sales Code: KS65BSN **Barcode:** 5056474592416 **Brand:** Arley Pro **Description:** Missing Title



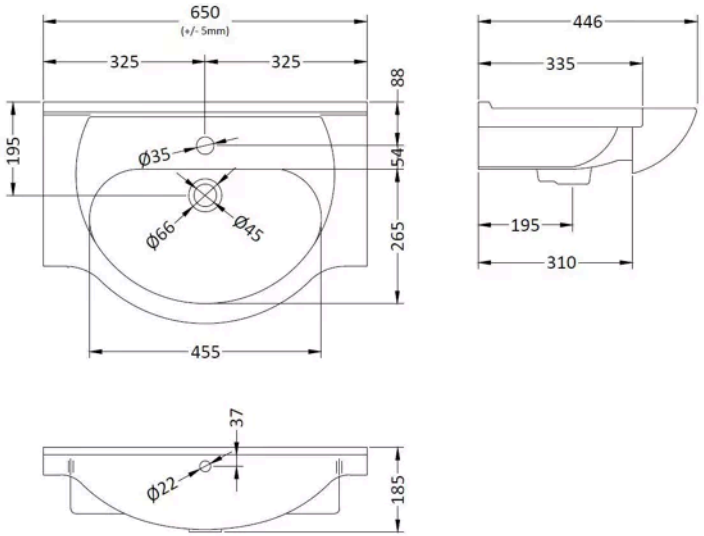

Product Dimensions

Product	185 x 650 x 446mm (H x W x D)
Packaged	470 x 670 x 200mm (H x W x D)
Nett Weight	16.5 kg
Packaged Weight	17.18 kg

Packaging Details

Box Qty	1

Product Details

Country of Origin	China
Product Material	Vitreous China
Colour/Finish	White
Ce Certified	Yes
Inner Bowl Height	115 mm
No. Of Tapholes	1
Number Of Bowls	1

© ROXOR Group

Sales Code: KS65UBL **Barcode:** 5056474592409 **Brand:** Arley Pro **Description:** Arley Kass 650 2 Dr FS, SB



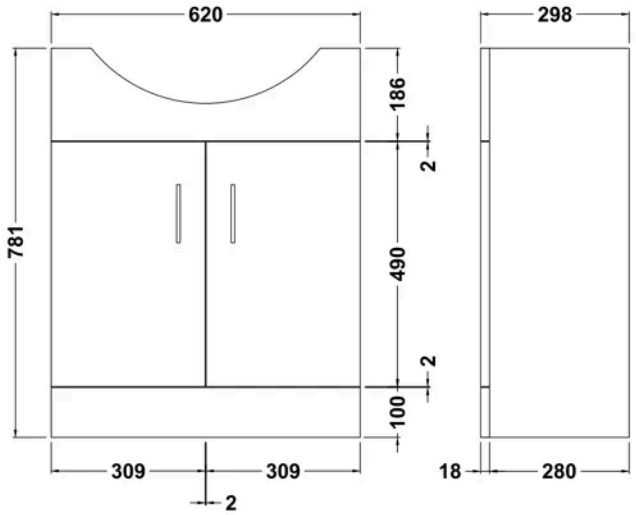

Product Dimensions

Product	781 x 620 x 298mm (H x W x D)
Packaged	325 x 645 x 815mm (H x W x D)
Nett Weight	19.5 kg
Packaged Weight	19.5 kg

Packaging Details

Box Qty	1

Product Details

Country of Origin	China
Product Material	Mdf Painted Matt
Colour/Finish	Soft Black
Mount Type	Floor
Style	Contemporary
Handle Type	D Shape
Construction Method	Cam & Wood Dowel
Construction Type	Rigid
Fascia Finish	Mdf Painted Matt
Fsc Certified	Yes
Handles Included	Yes
Leg Set Included	No
Material Thickness	16 mm
No. Doors	2
No. Shelves	1
Number Of Shelves	1

© ROXOR Group