Sales Code: KS65CS **Barcode:** 5056474592546 **Brand:** Arley Pro **Description:** Arley Pro Kass Gloss White 600mm Floor Standing Vanity Unit With Basin



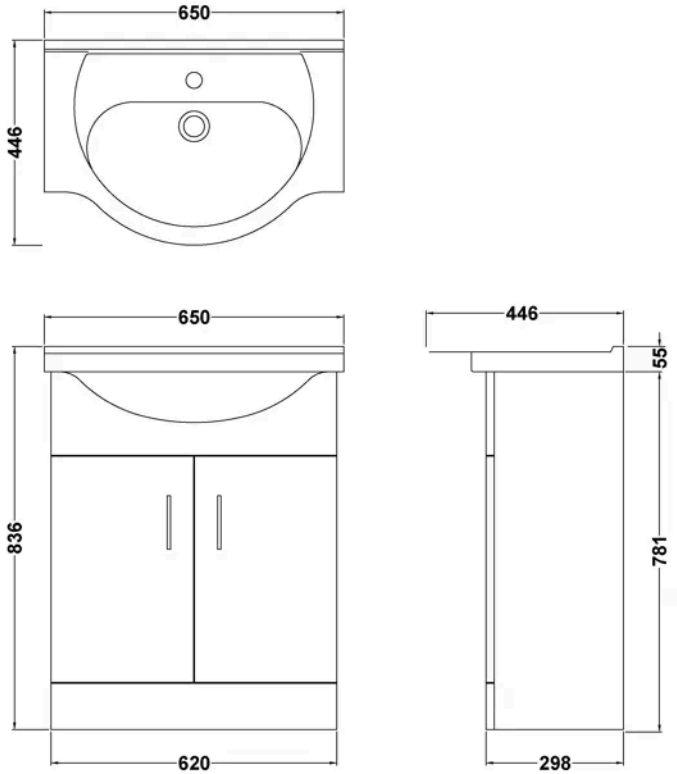

Product Dimensions

Product	827 x 650 x 440mm (H x W x D)
Packaged	825 x 330 x 625mm (H x W x D)
Nett Weight	38.3 kg
Packaged Weight	38.3 kg

Product Details

Country of Origin	Ukraine
Product Material	Engineered Wood
Colour/Finish	Gloss White
Mount Type	Floor
Style	Contemporary
Handle Type	D Shape
Construction Method	Cam & Wood Dowel
Construction Type	Flat-Pack
Fascia Finish	Mdf Painted Matt
Handles Included	Yes
Inner Bowl Depth	265 mm
Inner Bowl Height	115 mm
Inner Bowl Width	460 mm
Leg Set Included	No
Material Thickness	18 mm
No. Doors	2
No. Of Tapholes	1
No. Shelves	1
Number Of Bowls	1
Number Of Shelves	1
Overflow Included	Yes
Tap Included	No
Waste Included	No
Waste Shroud	No

© ROXOR Group