Sales Code: KS1050CS **Barcode:** 5056474592584 **Brand:** Arley Pro **Description:** Arley Pro Kass Gloss White 1100mm Floor Standing Vanity Unit With Basin



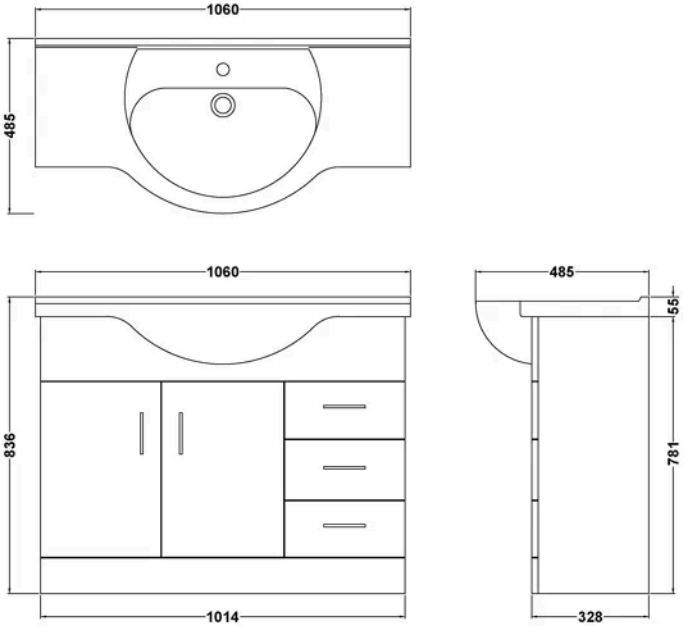

Product Dimensions

Product	836 x 1060 x 485mm (H x W x D)
Packaged	355 x 1040 x 815mm (H x W x D)
Nett Weight	66.68 kg
Packaged Weight	66.68 kg

Product Details

Country of Origin	China
Product Material	Mfc Painted Gloss
Colour/Finish	Gloss White
Mount Type	Floor
Style	Contemporary
Handle Type	D Shape
Construction Method	Cam & Wood Dowel
Construction Type	Rigid
Drawer Type	16mm MFC Non-Soft-close
Fascia Finish	Mdf Painted Gloss
Fsc Certified	Yes
Handles Included	Yes
Inner Bowl Depth	295 mm
Inner Bowl Height	145 mm
Inner Bowl Width	510 mm
Leg Set Included	No
Material Thickness	16 mm
No. Doors	2
No. Drawers	3
No. Of Tapholes	1
No. Shelves	1
Number Of Bowls	1
Number Of Shelves	1
Overflow Included	Yes
Tap Included	No
Waste Included	No
Waste Shroud	No

© ROXOR Group

Sales Code: KS105BSN **Barcode:** 5056474592478 **Brand:** Arley Pro **Description:** Missing Title



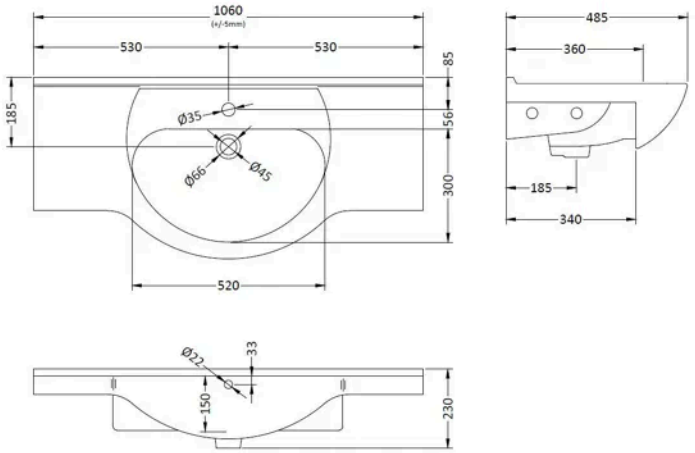

Product Dimensions

Product	485 x 1060 x 230mm (H x W x D)
Packaged	510 x 1060 x 240mm (H x W x D)
Nett Weight	30 kg
Packaged Weight	30.68 kg

Packaging Details

Box Qty	1

Product Details

Country of Origin	China
Product Material	Vitreous China
Colour/Finish	White
Ce Certified	Yes
Inner Bowl Height	145 mm
No. Of Tapholes	1
Number Of Bowls	1

© ROXOR Group

Sales Code: KS105UWH **Barcode:** 5056474592461 **Brand:** Arley Pro **Description:** Missing Title



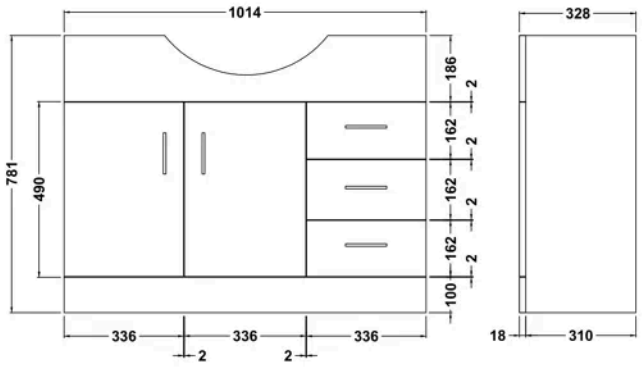

Product Dimensions

Product	781 x 1014 x 328mm (H x W x D)
Packaged	355 x 1040 x 815mm (H x W x D)
Nett Weight	36 kg
Packaged Weight	36 kg

Packaging Details

Box Qty	1

Product Details

Country of Origin	China
Product Material	Mdf Painted Gloss
Colour/Finish	White
Mount Type	Floor
Style	Contemporary
Handle Type	D Shape
Construction Method	Cam & Wood Dowel
Construction Type	Rigid
Drawer Type	16mm MFC Non-Soft-close
Fascia Finish	Mdf Painted Gloss
Fsc Certified	Yes
Handles Included	Yes
Leg Set Included	No
Material Thickness	16 mm
No. Doors	2
No. Drawers	3
No. Shelves	1
Number Of Shelves	1

© ROXOR Group