Sales Code: KAL303 **Barcode:** 5056678445297 **Brand:** nuie Choice **Description:** nuie choice Kalk Chrome Bath Filler



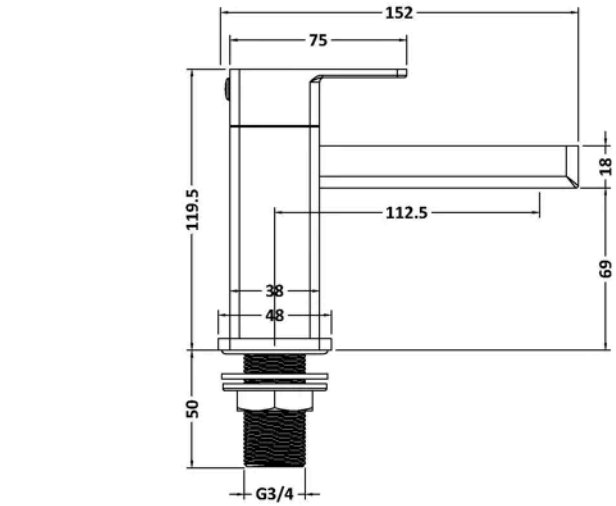

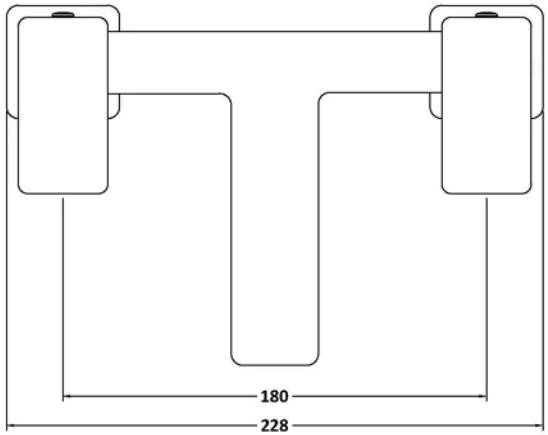

Product Dimensions

Product	120 x 228 x 152 x 120mm (H x W x D x L)
Packaged	160 x 250 x 200mm (H x W x D)
Outer Box	500 x 420 x 265mm (H x W x D)
Nett Weight	1.7 kg
Packaged Weight	1.9 kg

Packaging Details

Box Qty	1
Label Size (mm)	50 x 100
Label Colour	White
Label Qty	1.0000

Product Details

Country of Origin	China
Product Material	Brass
Control Type	Manual
WRAS Approved	No
Valve/Cartridge Type	1/4 Turn Ceramic Disc
Colour/Finish	Chrome
Mount Type	Deck
Style	Contemporary
Handle Type	Lever/Square
TMV2 Approved	No
TMV3 Approved	No
Handset Included	Yes
Min Operating Pressure	1 Bar
Tap Spout Height	69 mm
Tap Spout Projection	113 mm
Valve / Cartridge Type	1/4 Turn Ceramic Disc
Waste Included	No

© ROXOR Group