**Sales Code:** JNU2903B

**Barcode:** 5056678454275

**Brand:** Hudson Reed

**Description:** Hudson Reed Juno Midnight Blue 600mm 2 Door Floor Standing Vanity Unit With Minimalist Basin



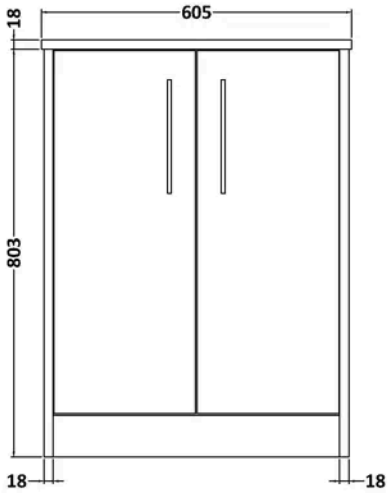


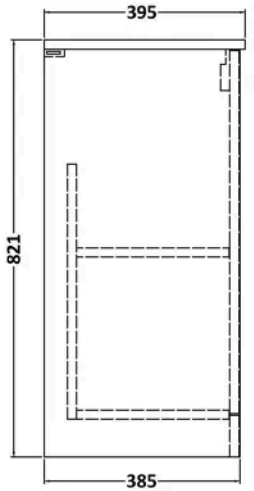


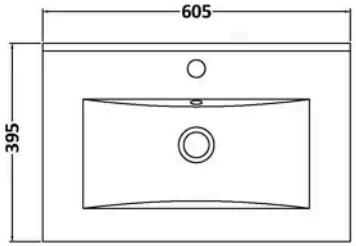


## Product Dimensions

| | |
|---|---|
| Product | 821 x 600 x 390mm (H x W x D) |
| Packaged | 823 x 620 x 405mm (H x W x D) |
| Nett Weight | 29.2 kg |
| Packaged Weight | 29.7 kg |

## Packaging Details

| | |
|---|---|
| Box Qty | 2 |

## Product Details

| | |
|---|---|
| Country of Origin | China |
| Product Material | Mfc Painted Matt |
| Colour/Finish | Midnight Blue |
| Mount Type | Floor |
| Style | Contemporary |
| Handle Type | D Shape |
| Construction Method | Cam & Wood Dowel |
| Construction Type | Rigid |
| Fascia Finish | Mfc Painted Matt |
| Fsc Certified | Yes |
| Handles Included | Yes |
| Inner Bowl Height | 130 mm |
| Leg Set Included | No |
| Material Thickness | 16 mm |
| No. Doors | 2 |
| No. Of Tapholes | 1 |
| No. Shelves | 1 |
| Number Of Bowls | 1 |
| Number Of Shelves | 1 |
| Overflow Included | Yes |
| Tap Included | No |
| Waste Included | No |

© ROXOR Group

**Sales Code:** NPF2903 **Barcode:** 5056678447581 **Brand:** Hudson Reed **Description:** Hudson Reed Juno 600mm 2 Door Floor Standing Vanity Unit



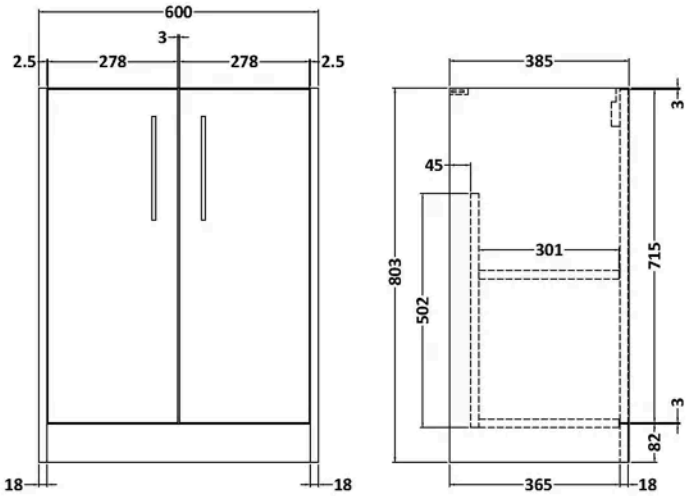


## Product Dimensions

| | |
|---|---|
| Product | 803 x 600 x 385mm (H x W x D) |
| Packaged | 835 x 620 x 395mm (H x W x D) |
| Nett Weight | 19 kg |
| Packaged Weight | 19.5 kg |

## Packaging Details

| | |
|---|---|
| Box Qty | 1 |

## Product Details

| | |
|---|---|
| Country of Origin | China |
| Product Material | Mdf Painted Matt |
| Colour/Finish | Midnight Blue |
| Mount Type | Floor |
| Style | Contemporary |
| Construction Method | Cam & Wood Dowel |
| Construction Type | Rigid |
| Fascia Finish | Mdf Painted Matt |
| Handles Included | Yes |
| Material Thickness | 18 mm |
| No. Doors | 2 |
| No. Shelves | 1 |
| Number Of Shelves | 1 |

© ROXOR Group

**Sales Code:** NVM003 **Barcode:** 5055146194668 **Brand:** nuie **Description:** 1 Tap Hole 600mm Minimalist Ceramic Basin



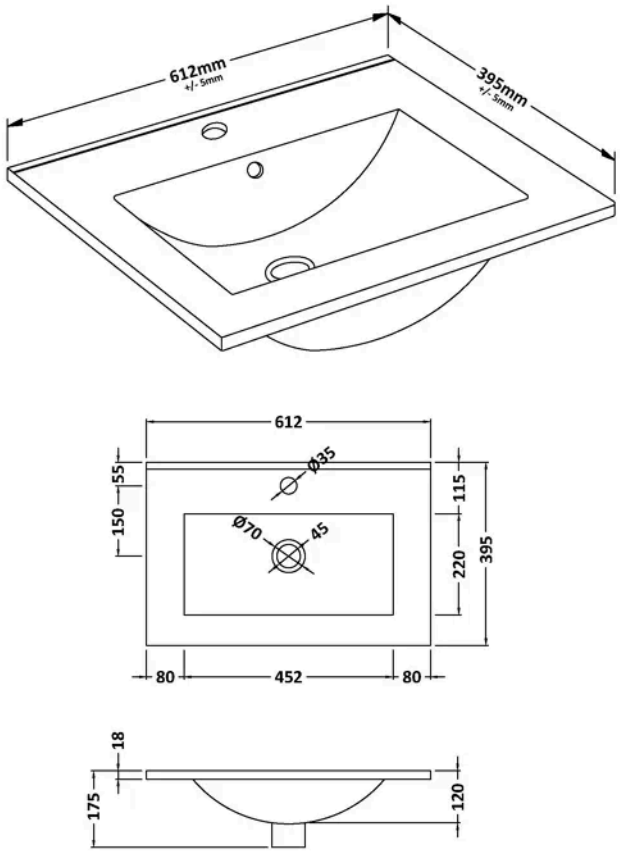


## Product Dimensions

| | |
|---|---|
| Product | 175 x 612 x 395mm (H x W x D) |
| Packaged | 400 x 620 x 200mm (H x W x D) |
| Nett Weight | 10.7 kg |
| Packaged Weight | 11.4 kg |

## Packaging Details

| | |
|---|---|
| Box Qty | 1 |

## Product Details

| | |
|---|---|
| Country of Origin | China |
| Product Material | Vitreous China |
| Colour/Finish | White |
| Style | Contemporary |
| Ce Certified | Yes |
| Inner Bowl Height | 130 mm |
| No. Of Tapholes | 1 |
| Number Of Bowls | 1 |
| Overflow Included | Yes |
| Tap Included | No |
| Waste Included | No |

© ROXOR Group