Sales Code: JNU2623LCM2

Barcode: 5056678457894

Brand: Hudson Reed

Description: Hudson Reed Juno 1205mm Metallic Slate 2 Door Wall Hung Vanity With Carrara Laminate Worktop



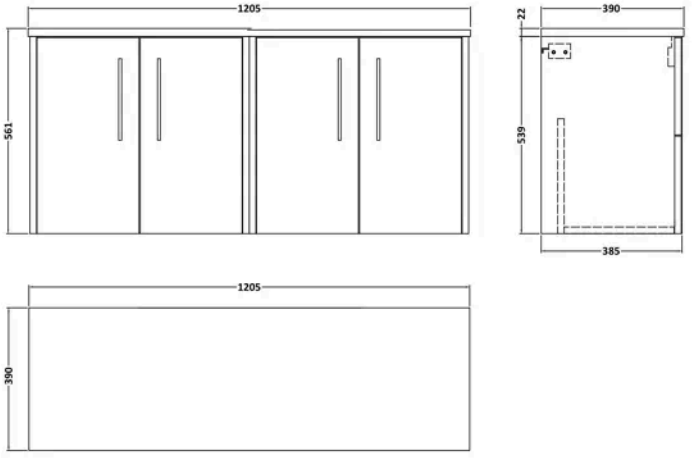

Product Dimensions

Product	561 x 1205 x 390mm (H x W x D)
Packaged	560 x 1220 x 405mm (H x W x D)
Nett Weight	32.9 kg
Packaged Weight	33.4 kg

Packaging Details

Box Qty	3

Product Details

Country of Origin	United Kingdom
Product Material	Mfc Textured Matt
Colour/Finish	Metallic Slate
Mount Type	Wall Hung
Style	Contemporary
Handle Type	D Shape
Construction Method	Cam & Wood Dowel
Construction Type	Rigid
Fascia Finish	Mfc Textured Matt
Fsc Certified	Yes
Handles Included	Yes
Material Thickness	18 mm
No. Doors	2
Waste Shroud	No

© ROXOR Group

Sales Code: LCM1200 **Barcode:** 5056678449936 **Brand:** nuie **Description:** 1205 x 390mm Carrera Marble Laminate Worktop



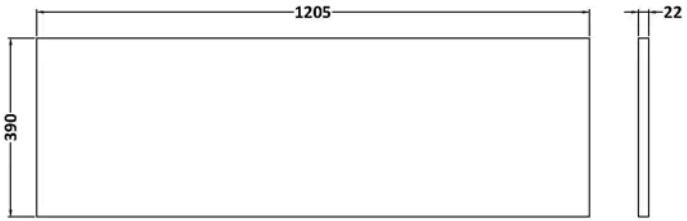

Product Dimensions

Product	22 x 1205 x 390mm (H x W x D)
Packaged	25 x 1215 x 455mm (H x W x D)
Nett Weight	5 kg
Packaged Weight	5 kg

Packaging Details

Box Qty	1

Product Details

Country of Origin	United Kingdom
Product Material	Mfc Laminated
Colour/Finish	Carrera Marble
Style	Contemporary

© ROXOR Group

Sales Code: NPF2623 **Barcode:** 5056462658858 **Brand:** Hudson Reed **Description:** Hudson Reed Juno 385mm 2 Door Wall Hung Vanity Unit 600mm



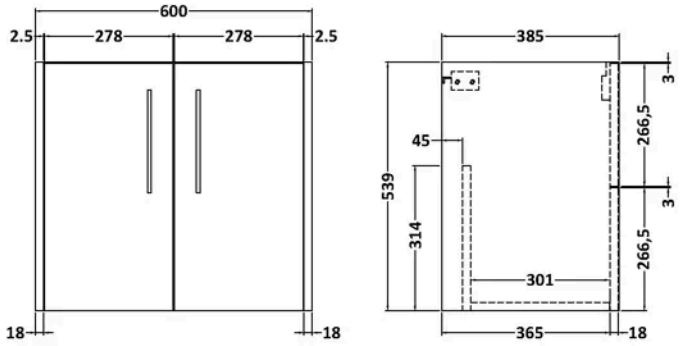

Product Dimensions

Product	539 x 600 x 385mm (H x W x D)
Packaged	560 x 620 x 405mm (H x W x D)
Nett Weight	14.2 kg
Packaged Weight	14.7 kg

Packaging Details

Box Qty	1

Product Details

Country of Origin	United Kingdom
Product Material	Mdf Painted Matt
Colour/Finish	Metallic Slate
Mount Type	Wall Hung
Style	Contemporary
Construction Method	Cam & Wood Dowel
Construction Type	Rigid
Fascia Finish	Mdf Painted Matt
Handles Included	Yes
Material Thickness	18 mm
No. Doors	2
No. Shelves	1
Number Of Shelves	1

© ROXOR Group