Sales Code: JNU2623C

Barcode: 5056462682914

Brand: Hudson Reed

Description: Hudson Reed Juno Metallic Slate 1200mm 4 Door Wall Hung Vanity Unit With 2 Tap Hole Polymarble basin



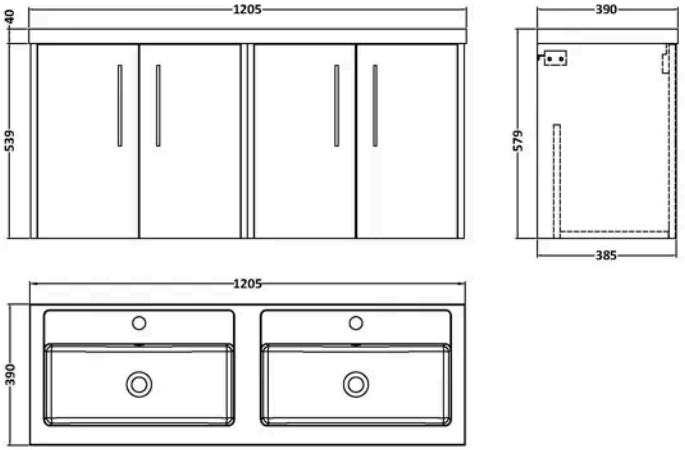

Product Dimensions

Product	539 x 1205 x 390mm (H x W x D)
Packaged	550 x 550 x 550mm (H x W x D)
Nett Weight	46.02 kg
Packaged Weight	46.52 kg

Packaging Details

Box Qty	3

Product Details

Country of Origin	United Kingdom
Product Material	Mfc Textured Matt
Colour/Finish	Metallic Slate
Mount Type	Wall Hung
Style	Contemporary
Handle Type	D Shape
Construction Method	Cam & Wood Dowel
Construction Type	Rigid
Fascia Finish	Mfc Textured Matt
Fsc Certified	Yes
Handles Included	Yes
Inner Bowl Height	103 mm
Leg Set Included	No
Material Thickness	18 mm
No. Doors	4
No. Of Tapholes	2
No. Shelves	1
Number Of Bowls	2
Number Of Shelves	1
Overflow Included	Yes
Tap Included	No
Waste Included	No
Waste Shroud	No

© ROXOR Group

Sales Code: NPF2623 **Barcode:** 5056462658858 **Brand:** Hudson Reed **Description:** Hudson Reed Juno 385mm 2 Door Wall Hung Vanity Unit 600mm



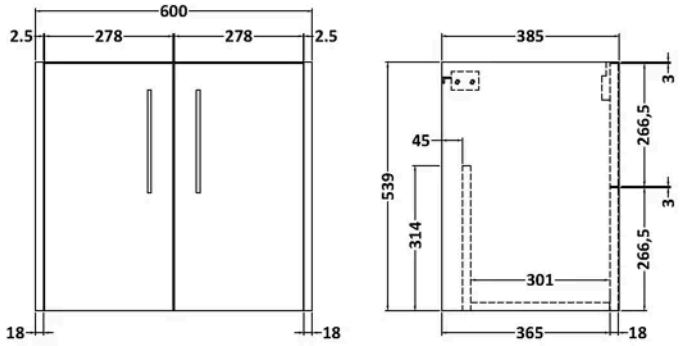

Product Dimensions

Product	539 x 600 x 385mm (H x W x D)
Packaged	560 x 620 x 405mm (H x W x D)
Nett Weight	14.2 kg
Packaged Weight	14.7 kg

Packaging Details

Box Qty	1

Product Details

Country of Origin	United Kingdom
Product Material	Mdf Painted Matt
Colour/Finish	Metallic Slate
Mount Type	Wall Hung
Style	Contemporary
Construction Method	Cam & Wood Dowel
Construction Type	Rigid
Fascia Finish	Mdf Painted Matt
Handles Included	Yes
Material Thickness	18 mm
No. Doors	2
No. Shelves	1
Number Of Shelves	1

© ROXOR Group

Sales Code: PMB424 **Barcode:** 5056211815136 **Brand:** nuie **Description:** 1200mm 2 Tap Hole Twin Polymarble Basin



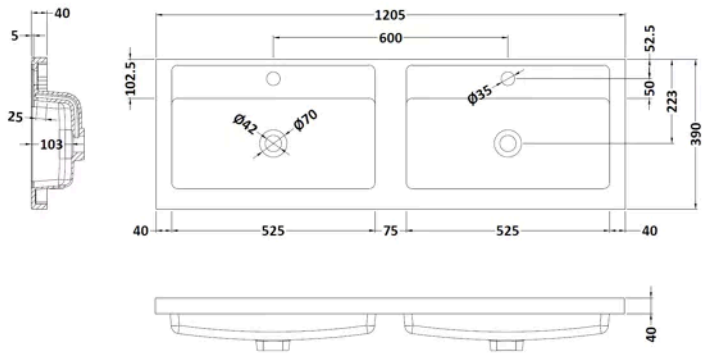

Product Dimensions

Product	100 x 1205 x 390mm (H x W x D)
Packaged	100 x 1205 x 400mm (H x W x D)
Nett Weight	18.12 kg
Packaged Weight	18.12 kg

Packaging Details

Box Qty	1

Product Details

Country of Origin	China
Product Material	Polymarble
Colour/Finish	White
Style	Contemporary
Ce Certified	Yes
Inner Bowl Height	103 mm
No. Of Tapholes	2
Number Of Bowls	1
Overflow Included	Yes
Tap Included	No
Waste Included	No

© ROXOR Group