Sales Code: JNU2323G

Barcode: 5056462681283

Brand: Hudson Reed

Description: Hudson Reed Juno Coastal Grey 600mm 2 Door Wall Hung Vanity Unit With U-Shaped Curved Basin



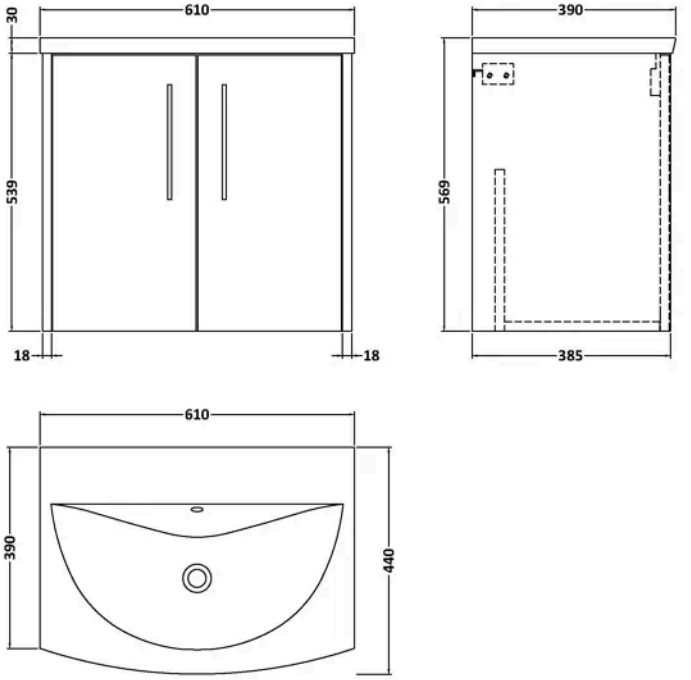

Product Dimensions

Product	569 x 610 x 440mm (H x W x D)
Packaged	560 x 620 x 405mm (H x W x D)
Nett Weight	24.7 kg
Packaged Weight	25.2 kg

Packaging Details

Box Qty	2

Product Details

Country of Origin	United Kingdom
Product Material	Mfc Smooth Matt
Colour/Finish	Coastal Grey
Mount Type	Wall Hung
Style	Contemporary
Handle Type	D Shape
Construction Method	Cam & Wood Dowel
Construction Type	Rigid
Fascia Finish	Mfc Smooth Woodgrain
Fsc Certified	Yes
Handles Included	Yes
Inner Bowl Height	125 mm
Leg Set Included	No
Material Thickness	18 mm
No. Doors	2
No. Of Tapholes	1
Number Of Bowls	1
Overflow Included	Yes
Tap Included	No
Waste Included	No
Waste Shroud	No

© ROXOR Group

Sales Code: NPF2323 **Barcode:** 5056462657103 **Brand:** Hudson Reed **Description:** Hudson Reed Juno 600mm 2-Door Wall Hung Vanity Unit



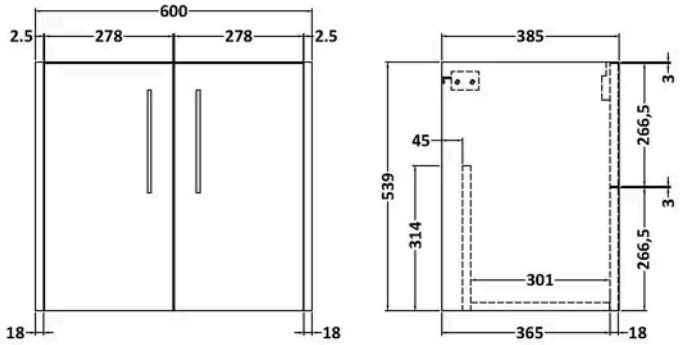

Product Dimensions

Product	539 x 600 x 385mm (H x W x D)
Packaged	560 x 620 x 405mm (H x W x D)
Nett Weight	14.2 kg
Packaged Weight	14.7 kg

Packaging Details

Box Qty	1

Product Details

Country of Origin	United Kingdom
Product Material	Mdf Painted Matt
Colour/Finish	Coastal Grey
Mount Type	Wall Hung
Style	Contemporary
Construction Method	Cam & Wood Dowel
Construction Type	Rigid
Fascia Finish	Mdf Painted Matt
Handles Included	Yes
Material Thickness	18 mm
No. Doors	2

© ROXOR Group

Sales Code: NVM043 **Barcode:** 5056462620961 **Brand:** nuie **Description:** 1 Tap Hole 600mm Curved Ceramic Basin



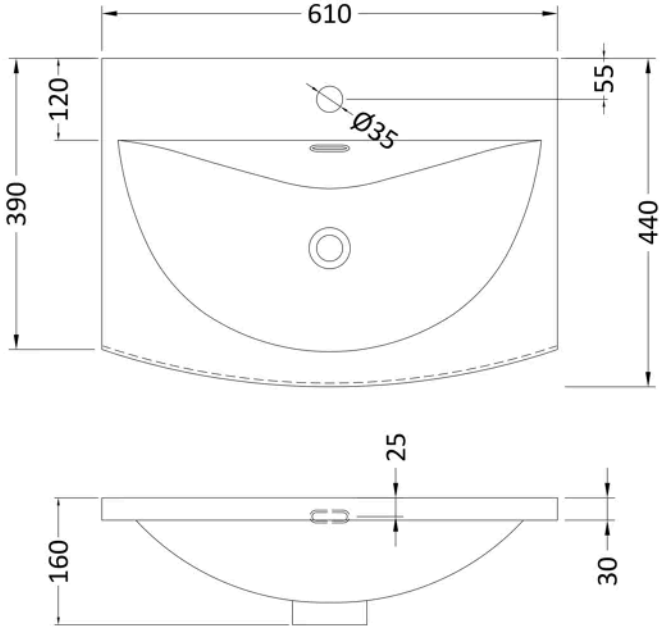

Product Dimensions

Product	160 x 610 x 440mm (H x W x D)
Packaged	190 x 630 x 415mm (H x W x D)
Nett Weight	11 kg
Packaged Weight	11.5 kg

Packaging Details

Box Qty	1

Product Details

Country of Origin	China
Product Material	Vitreous China
Colour/Finish	White
Style	Contemporary
Ce Certified	Yes
Inner Bowl Height	125 mm
No. Of Tapholes	1
Number Of Bowls	1
Overflow Included	Yes
Tap Included	No
Waste Included	No

© ROXOR Group