Sales Code: JNU2321D

Barcode: 5056462671376

Brand: Hudson Reed

Description: Hudson Reed Juno Coastal Grey 500mm 2 Door Wall Hung Vanity Unit With Thin Edge Basin



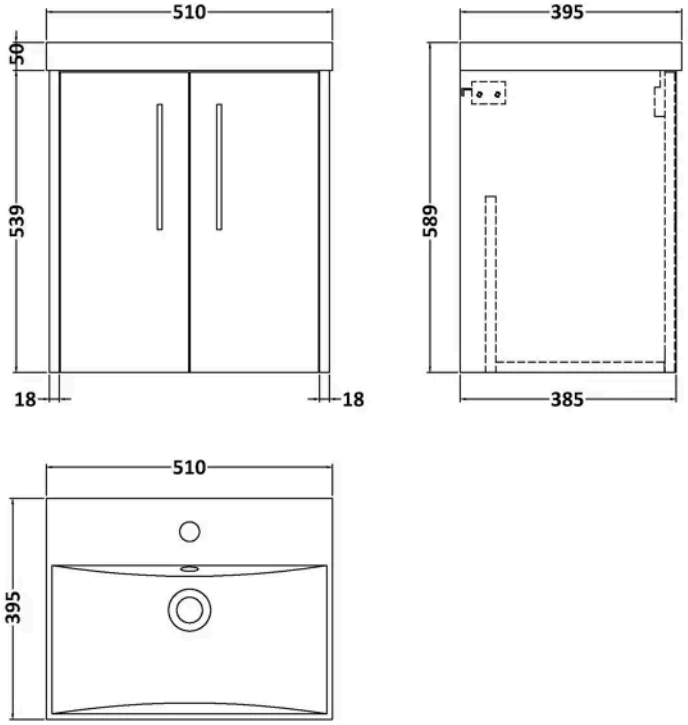

Product Dimensions

Product	589 x 500 x 395mm (H x W x D)
Packaged	560 x 520 x 405mm (H x W x D)
Nett Weight	21.5 kg
Packaged Weight	22 kg

Packaging Details

Box Qty	2

Product Details

Country of Origin	United Kingdom
Product Material	Mfc Smooth Matt
Colour/Finish	Coastal Grey
Mount Type	Wall Hung
Style	Contemporary
Handle Type	D Shape
Construction Method	Cam & Wood Dowel
Construction Type	Rigid
Fascia Finish	Mfc Smooth Matt
Fsc Certified	Yes
Handles Included	Yes
Inner Bowl Height	125 mm
Leg Set Included	No
Material Thickness	18 mm
No. Doors	2
No. Of Tapholes	1
Number Of Bowls	1
Overflow Included	Yes
Tap Included	No
Waste Included	No
Waste Shroud	No

© ROXOR Group

Sales Code: NPF2321 **Barcode:** 5056462657059 **Brand:** Hudson Reed **Description:** Hudson Reed Juno 500mm 2-Door Wall Hung Vanity Unit



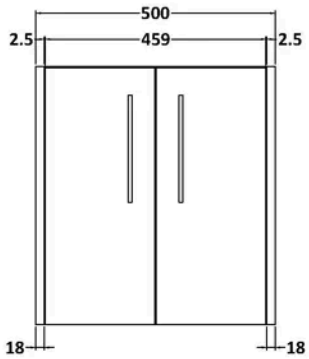

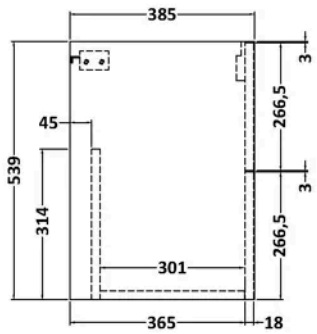

Product Dimensions

Product	539 x 500 x 385mm (H x W x D)
Packaged	560 x 520 x 405mm (H x W x D)
Nett Weight	12.5 kg
Packaged Weight	13 kg

Packaging Details

Box Qty	1

Product Details

Country of Origin	United Kingdom
Product Material	Mdf Painted Matt
Colour/Finish	Coastal Grey
Mount Type	Wall Hung
Style	Contemporary
Construction Method	Cam & Wood Dowel
Construction Type	Rigid
Fascia Finish	Mdf Painted Matt
Handles Included	Yes
Material Thickness	18 mm
No. Doors	2

© ROXOR Group

Sales Code: NVM032 **Barcode:** 5056211853411 **Brand:** nuie **Description:** 1 Tap Hole 500mm Thin Edge Ceramic Basin



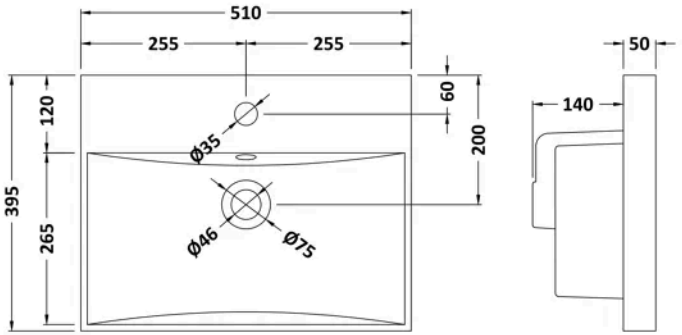

Product Dimensions

Product	190 x 510 x 395mm (H x W x D)
Packaged	190 x 530 x 415mm (H x W x D)
Nett Weight	9.5 kg
Packaged Weight	10 kg

Packaging Details

Box Qty	1

Product Details

Country of Origin	China
Product Material	Vitreous China
Colour/Finish	White
Style	Contemporary
Ce Certified	Yes
Inner Bowl Height	125 mm
No. Of Tapholes	1
Number Of Bowls	1
Overflow Included	Yes
Tap Included	No
Waste Included	No

© ROXOR Group