Sales Code: JNU2305B

Barcode: 5056462671215

Brand: Hudson Reed

Description: Hudson Reed Juno Coastal Grey 800mm 2 Door Floor Standing Vanity Unit With Minimalist Basin



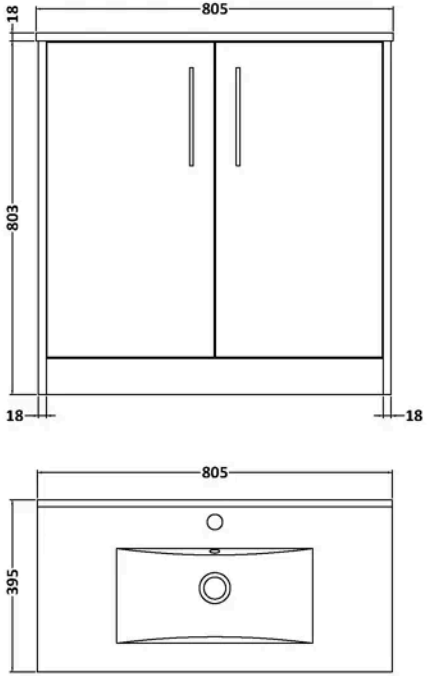

Product Dimensions

Product	818 x 800 x 390mm (H x W x D)
Packaged	823 x 820 x 405mm (H x W x D)
Nett Weight	39.74 kg
Packaged Weight	40.24 kg

Packaging Details

Box Qty	2

Product Details

Country of Origin	United Kingdom
Product Material	Mfc Smooth Matt
Colour/Finish	Coastal Grey
Mount Type	Floor
Style	Contemporary
Handle Type	D Shape
Construction Method	Cam & Wood Dowel
Construction Type	Rigid
Fascia Finish	Mfc Smooth Matt
Fsc Certified	Yes
Handles Included	Yes
Inner Bowl Height	125 mm
Leg Set Included	No
Material Thickness	18 mm
No. Doors	2
No. Of Tapholes	1
No. Shelves	1
Number Of Bowls	1
Number Of Shelves	1
Overflow Included	Yes
Tap Included	No
Waste Included	No

© ROXOR Group

Sales Code: NPF2305 **Barcode:** 5056462657004 **Brand:** Hudson Reed **Description:** Hudson Reed Juno 800mm 2-Door Floor Standing Vanity Unit



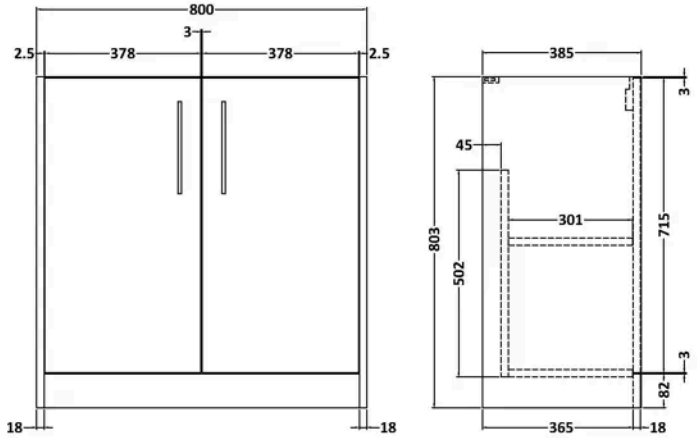

Product Dimensions

Product	803 x 800 x 385mm (H x W x D)
Packaged	835 x 820 x 395mm (H x W x D)
Nett Weight	26.5 kg
Packaged Weight	27 kg

Packaging Details

Box Qty	1

Product Details

Country of Origin	United Kingdom
Product Material	Mdf Painted Matt
Colour/Finish	Coastal Grey
Mount Type	Floor
Style	Contemporary
Construction Method	Cam & Wood Dowel
Construction Type	Rigid
Fascia Finish	Mdf Painted Matt
Handles Included	Yes
Material Thickness	18 mm
No. Doors	2

© ROXOR Group

Sales Code: NVM005 **Barcode:** 5055146194675 **Brand:** nuie **Description:** 1 Tap Hole 800mm Minimalist Ceramic Basin



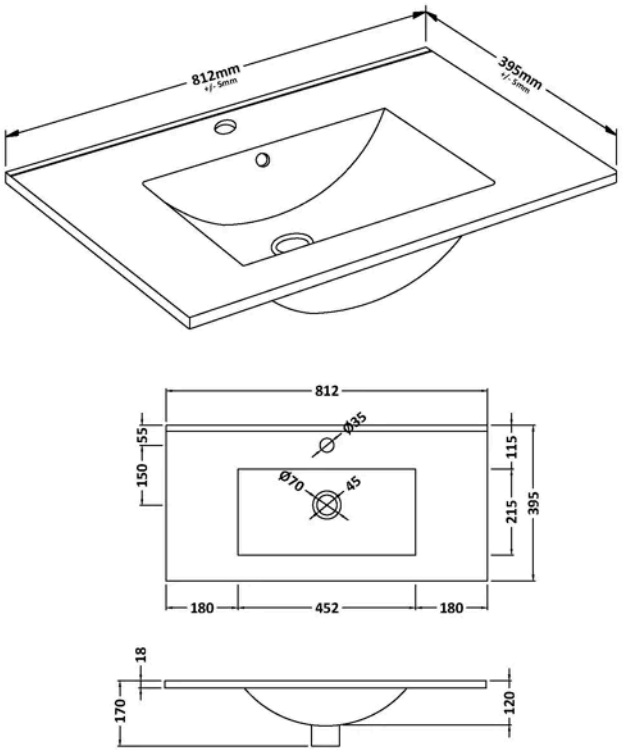

Product Dimensions

Product	170 x 812 x 395mm (H x W x D)
Packaged	400 x 820 x 200mm (H x W x D)
Nett Weight	13.74 kg
Packaged Weight	15 kg

Packaging Details

Box Qty	1

Product Details

Country of Origin	China
Product Material	Vitreous China
Colour/Finish	White
Style	Contemporary
Ce Certified	Yes
Inner Bowl Height	125 mm
No. Of Tapholes	1
Number Of Bowls	1
Overflow Included	Yes
Tap Included	No
Waste Included	No

© ROXOR Group