Sales Code: JNU1824C

Barcode: 5056462673622

Brand: Hudson Reed

Description: Hudson Reed Juno Autumn Oak 1200mm 4 Drawer Wall Hung Vanity Unit With 2 Tap Hole Polymarble basin



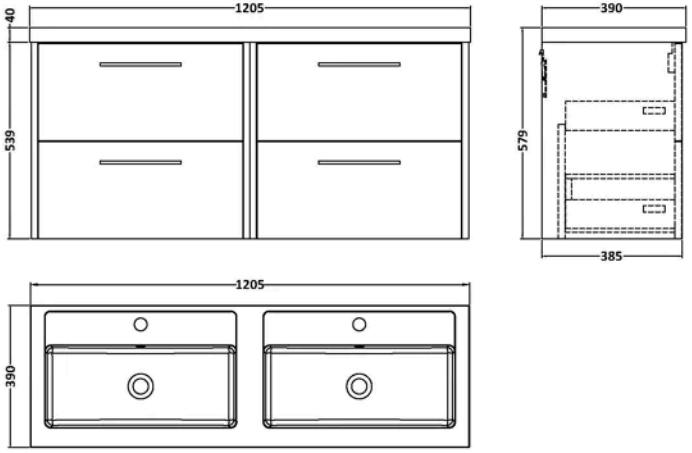

Product Dimensions

Product	539 x 1205 x 390mm (H x W x D)
Packaged	560 x 1200 x 405mm (H x W x D)
Nett Weight	62.62 kg
Packaged Weight	63.12 kg

Packaging Details

Box Qty	3

Product Details

Country of Origin	United Kingdom
Product Material	Mfc Textured Woodgrain
Colour/Finish	Autumn Oak
Mount Type	Wall Hung
Style	Contemporary
Handle Type	D Shape
Construction Method	Cam & Wood Dowel
Construction Type	Rigid
Drawer Type	80mm High Metal Soft-close
Fascia Finish	Mfc Smooth Matt
Fsc Certified	Yes
Handles Included	Yes
Inner Bowl Height	103 mm
Leg Set Included	No
Material Thickness	18 mm
No. Drawers	4
No. Of Tapholes	2
Number Of Bowls	2
Overflow Included	Yes
Tap Included	No
Waste Included	No
Waste Shroud	Yes

© ROXOR Group

Sales Code: NPF1824 **Barcode:** 5056462657271 **Brand:** Hudson Reed **Description:** Hudson Reed Juno 600mm 2-Drawer Wall Hung Vanity Unit



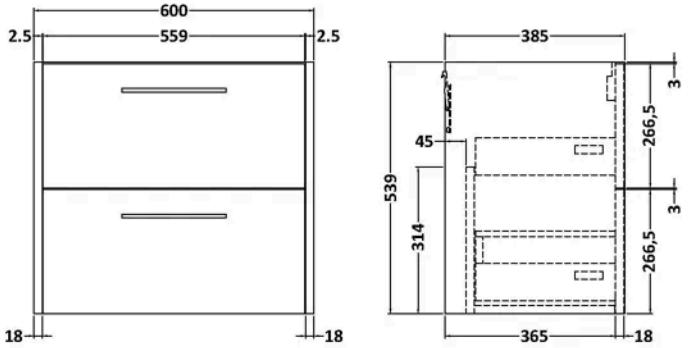

Product Dimensions

Product	539 x 600 x 385mm (H x W x D)
Packaged	560 x 620 x 405mm (H x W x D)
Nett Weight	22.5 kg
Packaged Weight	23 kg

Packaging Details

Box Qty	1

Product Details

Country of Origin	United Kingdom
Product Material	Mfc Textured Woodgrain
Colour/Finish	Autumn Oak
Mount Type	Wall Hung
Style	Contemporary
Construction Method	Cam & Wood Dowel
Construction Type	Rigid
Fascia Finish	Mfc Textured Woodgrain
Handles Included	Yes
Material Thickness	18 mm
No. Drawers	2

© ROXOR Group

Sales Code: PMB424 **Barcode:** 5056211815136 **Brand:** nuie **Description:** 1200mm 2 Tap Hole Twin Polymarble Basin



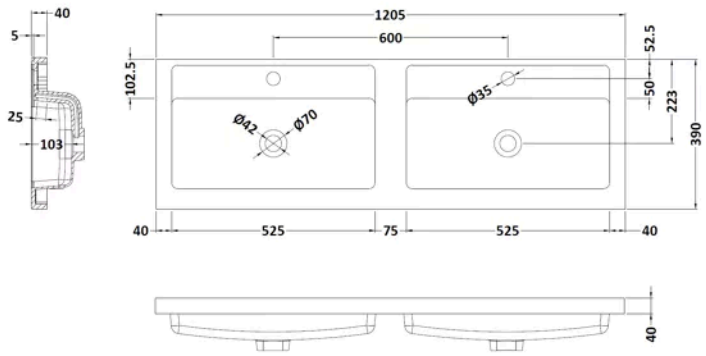

Product Dimensions

Product	100 x 1205 x 390mm (H x W x D)
Packaged	100 x 1205 x 400mm (H x W x D)
Nett Weight	18.12 kg
Packaged Weight	18.12 kg

Packaging Details

Box Qty	1

Product Details

Country of Origin	China
Product Material	Polymarble
Colour/Finish	White
Style	Contemporary
Ce Certified	Yes
Inner Bowl Height	103 mm
No. Of Tapholes	2
Number Of Bowls	1
Overflow Included	Yes
Tap Included	No
Waste Included	No

© ROXOR Group