Sales Code: JNU1823LSB2

Barcode: 5056678457429

Brand: Hudson Reed

Description: Hudson Reed Juno 1200mm Wall Hung Autumn Oak Vanity Unit With Laminate Worktop



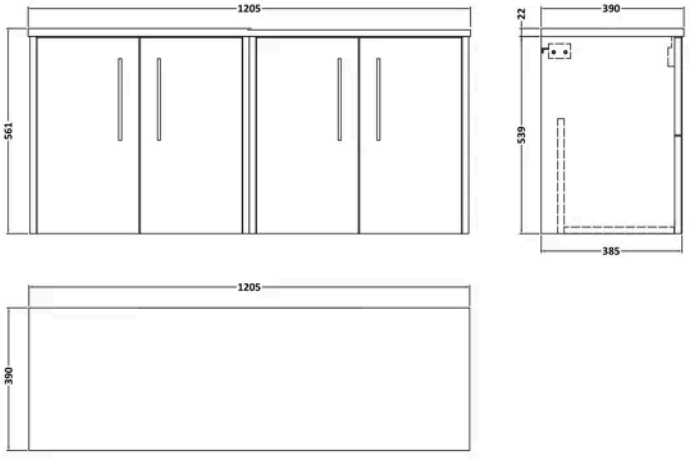

Product Dimensions

Product	561 x 1205 x 390mm (H x W x D)
Packaged	560 x 1220 x 405mm (H x W x D)
Nett Weight	34.4 kg
Packaged Weight	34.4 kg

Product Details

Country of Origin	United Kingdom
Product Material	Mfc Textured Woodgrain
Colour/Finish	Autumn Oak
Mount Type	Wall Hung
Style	Contemporary
Handle Type	D Shape
Construction Method	Cam & Wood Dowel
Construction Type	Rigid
Fascia Finish	Mfc Smooth Woodgrain
Fsc Certified	Yes
Handles Included	Yes
Material Thickness	18 mm
No. Doors	2
Waste Shroud	No

© ROXOR Group

Sales Code: LSB1200 **Barcode:** 5056678449929 **Brand:** nuie **Description:** Laminate Worktop 1205x390x22mm



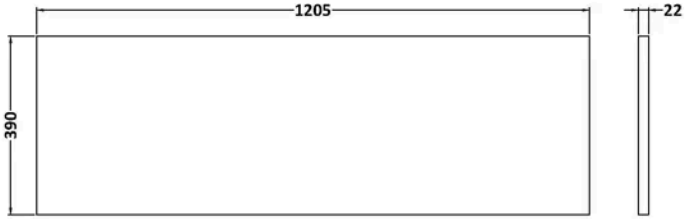

Product Dimensions

Product	22 x 1205 x 390mm (H x W x D)
Packaged	25 x 1215 x 455mm (H x W x D)
Nett Weight	5 kg
Packaged Weight	5 kg

Product Details

Country of Origin	United Kingdom
Product Material	Mfc Laminated
Colour/Finish	Black
Style	Contemporary

© ROXOR Group

Sales Code: NPF1823 **Barcode:** 5056462657127 **Brand:** Hudson Reed **Description:** Hudson Reed Juno 600mm 2-Door Wall Hung Vanity Unit



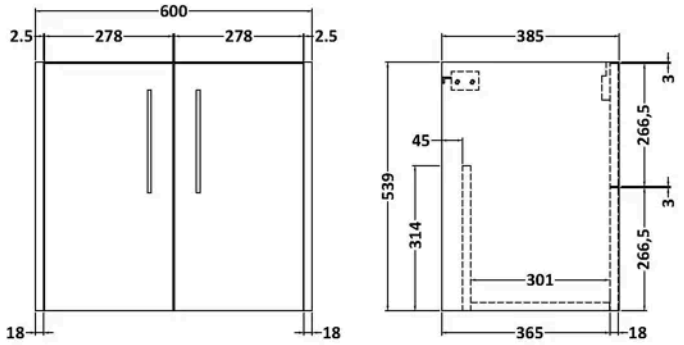

Product Dimensions

Product	539 x 600 x 385mm (H x W x D)
Packaged	560 x 620 x 405mm (H x W x D)
Nett Weight	14.2 kg
Packaged Weight	14.7 kg

Product Details

Country of Origin	United Kingdom
Product Material	Mfc Textured Woodgrain
Colour/Finish	Autumn Oak
Mount Type	Wall Hung
Style	Contemporary
Construction Method	Cam & Wood Dowel
Construction Type	Rigid
Fascia Finish	Mfc Textured Woodgrain
Handles Included	Yes
Material Thickness	18 mm
No. Doors	2

© ROXOR Group