Sales Code: JNU1823F

Barcode: 5056462673318

Brand: Hudson Reed

Description: Hudson Reed Juno Autumn Oak 1200mm 4 Door Wall Hung Vanity Unit With 2 Tap Hole Ceramic Basin



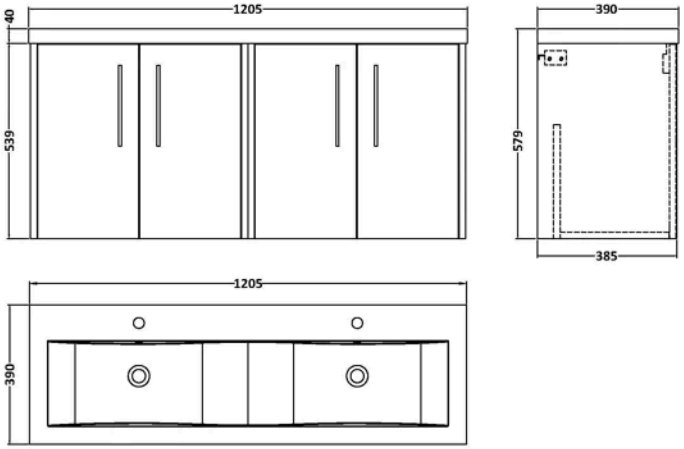

Product Dimensions

Product	539 x 1205 x 390mm (H x W x D)
Packaged	560 x 1200 x 405mm (H x W x D)
Nett Weight	46.02 kg
Packaged Weight	46.52 kg

Packaging Details

Box Qty	3

Product Details

Country of Origin	United Kingdom
Product Material	Mfc Textured Woodgrain
Colour/Finish	Autumn Oak
Mount Type	Wall Hung
Style	Contemporary
Handle Type	D Shape
Construction Method	Cam & Wood Dowel
Construction Type	Rigid
Drawer Type	80mm High Metal Soft-close
Fascia Finish	Mfc Smooth Woodgrain
Fsc Certified	Yes
Handles Included	Yes
Inner Bowl Height	103 mm
Leg Set Included	No
Material Thickness	18 mm
No. Doors	4
No. Of Tapholes	2
Number Of Bowls	2
Overflow Included	Yes
Tap Included	No
Waste Included	No
Waste Shroud	No

© ROXOR Group

Sales Code: CBM424 **Barcode:** 5056211875826 **Brand:** nuie **Description:** 2 Tap Hole 1200mm Ceramic Mid-Edge Twin Basin



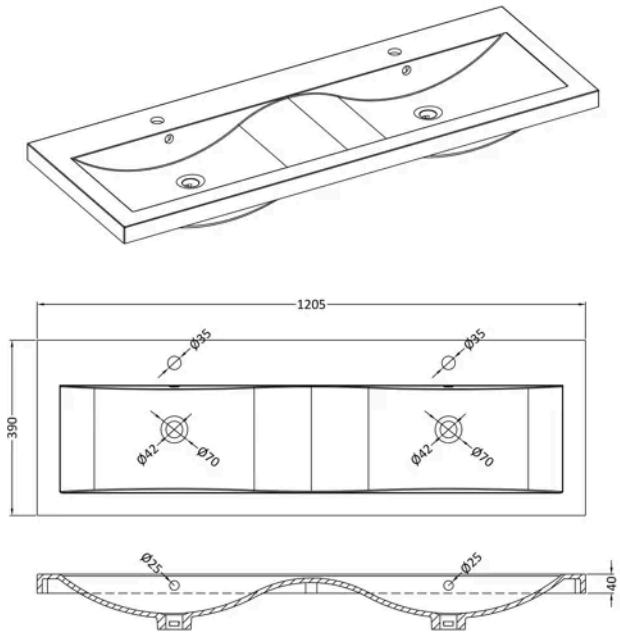

Product Dimensions

Product	390 x 1205 x 175mm (H x W x D)
Packaged	100 x 1205 x 400mm (H x W x D)
Nett Weight	18.12 kg
Packaged Weight	18.12 kg

Packaging Details

Box Qty	1

Product Details

Country of Origin	China
Product Material	Vitreous China
Colour/Finish	White
Style	Contemporary
Ce Certified	Yes
Inner Bowl Height	103 mm
No. Of Tapholes	2
Number Of Bowls	2
Overflow Included	Yes
Tap Included	No
Waste Included	No

© ROXOR Group

Sales Code: NPF1823 **Barcode:** 5056462657127 **Brand:** Hudson Reed **Description:** Hudson Reed Juno 600mm 2-Door Wall Hung Vanity Unit



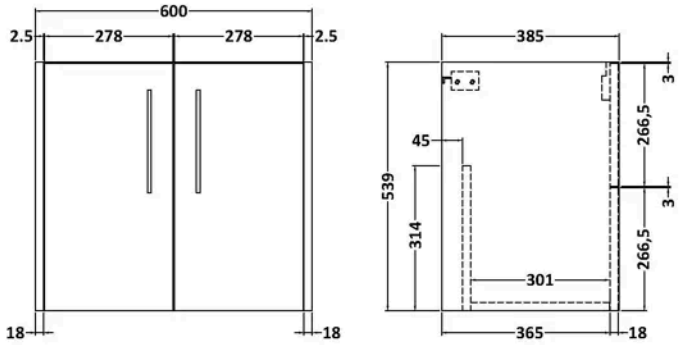

Product Dimensions

Product	539 x 600 x 385mm (H x W x D)
Packaged	560 x 620 x 405mm (H x W x D)
Nett Weight	14.2 kg
Packaged Weight	14.7 kg

Packaging Details

Box Qty	1

Product Details

Country of Origin	United Kingdom
Product Material	Mfc Textured Woodgrain
Colour/Finish	Autumn Oak
Mount Type	Wall Hung
Style	Contemporary
Construction Method	Cam & Wood Dowel
Construction Type	Rigid
Fascia Finish	Mfc Textured Woodgrain
Handles Included	Yes
Material Thickness	18 mm
No. Doors	2

© ROXOR Group