**Sales Code:** JNU1803G

**Barcode:** 5056462681153

**Brand:** Hudson Reed

**Description:** Hudson Reed Juno Autumn Oak 600mm 2 Door Floor Standing Vanity Unit With U-Shaped Curved Basin



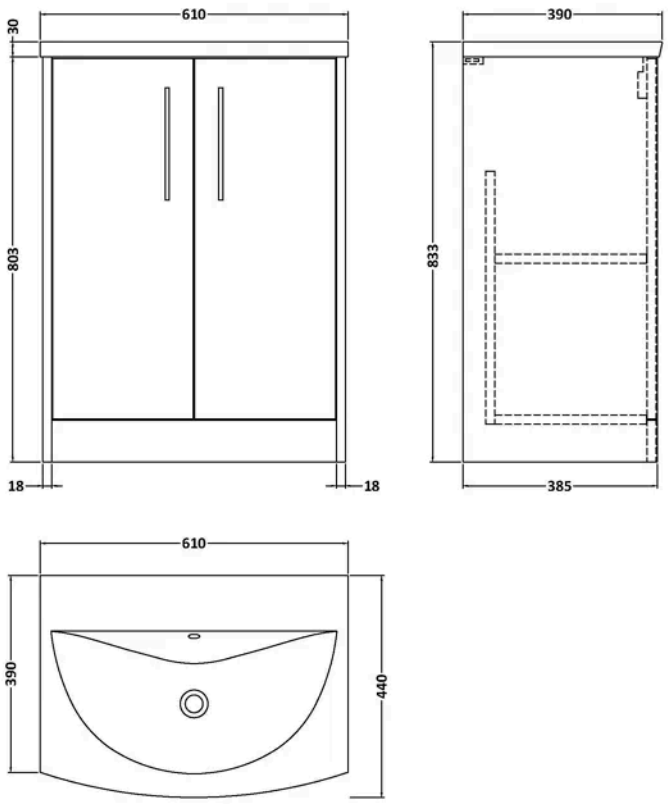


## Product Dimensions

| | |
|---|---|
| Product | 833 x 610 x 440mm (H x W x D) |
| Packaged | 820 x 620 x 405mm (H x W x D) |
| Nett Weight | 29.5 kg |
| Packaged Weight | 30 kg |

## Packaging Details

| | |
|---|---|
| Box Qty | 2 |

## Product Details

| | |
|---|---|
| Country of Origin | United Kingdom |
| Product Material | Mfc Textured Woodgrain |
| Colour/Finish | Autumn Oak |
| Mount Type | Floor |
| Style | Contemporary |
| Handle Type | D Shape |
| Construction Method | Cam & Wood Dowel |
| Construction Type | Rigid |
| Fascia Finish | Mfc Smooth Woodgrain |
| Fsc Certified | Yes |
| Handles Included | Yes |
| Inner Bowl Height | 125 mm |
| Leg Set Included | No |
| Material Thickness | 18 mm |
| No. Doors | 2 |
| No. Of Tapholes | 1 |
| No. Shelves | 1 |
| Number Of Bowls | 1 |
| Number Of Shelves | 1 |
| Overflow Included | Yes |
| Tap Included | No |
| Waste Included | No |

© ROXOR Group

**Sales Code:** NPF1803 **Barcode:** 5056462656977 **Brand:** Hudson Reed **Description:** Hudson Reed Juno 600mm 2-Door Floor Standing Vanity Unit



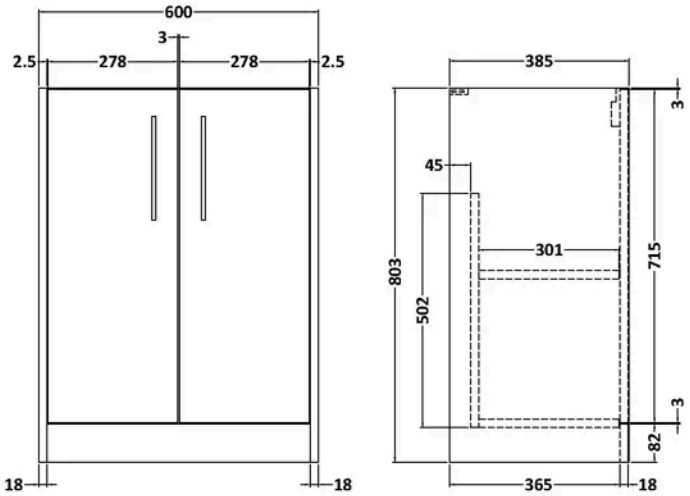


## Product Dimensions

| | |
|---|---|
| Product | 803 x 600 x 385mm (H x W x D) |
| Packaged | 835 x 620 x 395mm (H x W x D) |
| Nett Weight | 19 kg |
| Packaged Weight | 19.5 kg |

## Packaging Details

| | |
|---|---|
| Box Qty | 1 |

## Product Details

| | |
|---|---|
| Country of Origin | United Kingdom |
| Product Material | Mfc Textured Woodgrain |
| Colour/Finish | Autumn Oak |
| Mount Type | Floor |
| Style | Contemporary |
| Construction Method | Cam & Wood Dowel |
| Construction Type | Rigid |
| Fascia Finish | Mfc Textured Woodgrain |
| Handles Included | Yes |
| Material Thickness | 18 mm |
| No. Doors | 2 |

© ROXOR Group

**Sales Code:** NVM043 **Barcode:** 5056462620961 **Brand:** nuie **Description:** 1 Tap Hole 600mm Curved Ceramic Basin



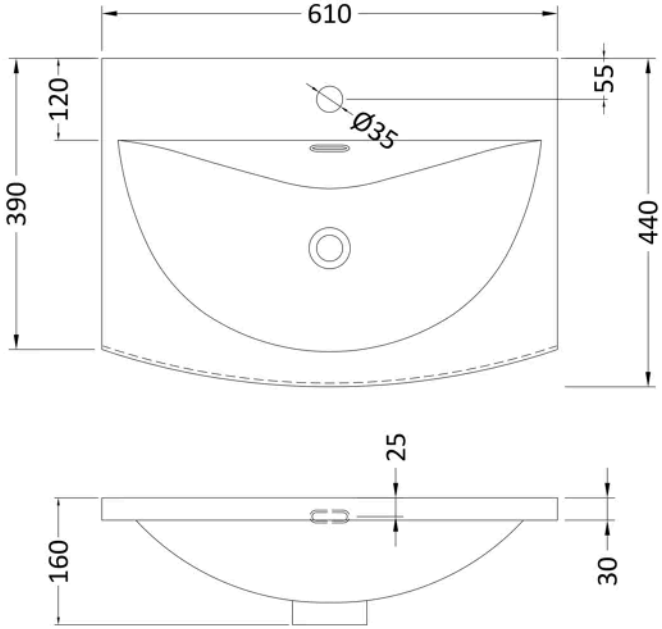


## Product Dimensions

| | |
|---|---|
| Product | 160 x 610 x 440mm (H x W x D) |
| Packaged | 190 x 630 x 415mm (H x W x D) |
| Nett Weight | 11 kg |
| Packaged Weight | 11.5 kg |

## Packaging Details

| | |
|---|---|
| Box Qty | 1 |

## Product Details

| | |
|---|---|
| Country of Origin | China |
| Product Material | Vitreous China |
| Colour/Finish | White |
| Style | Contemporary |
| Ce Certified | Yes |
| Inner Bowl Height | 125 mm |
| No. Of Tapholes | 1 |
| Number Of Bowls | 1 |
| Overflow Included | Yes |
| Tap Included | No |
| Waste Included | No |

© ROXOR Group