Sales Code: HV401 **Barcode:** 5056678497159 **Brand:** nuie Choice **Description:** nuie choice Black Straight Radiator Valves



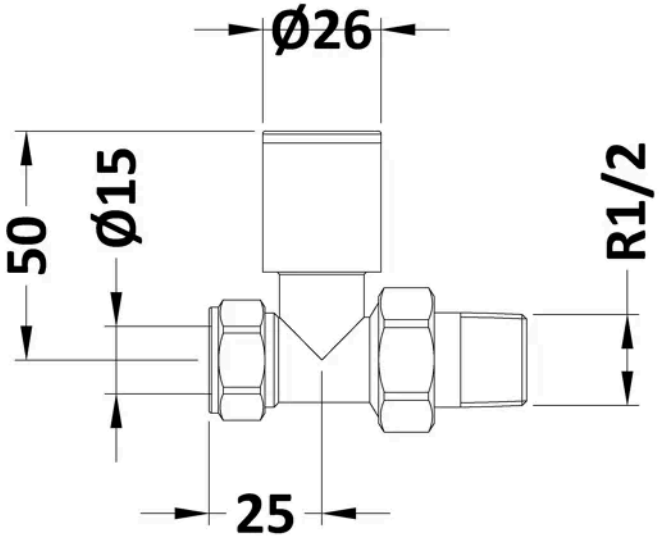

Product Dimensions

Product	81 x 30 x 70mm (H x W x D)
Packaged	50 x 110 x 120mm (H x W x D)
Nett Weight	0.59 kg
Packaged Weight	0.59 kg

Packaging Details

Box Qty	1

Product Details

Country of Origin	United Kingdom
Product Material	Brass
Colour/Finish	Black
Style	Contemporary

© ROXOR Group