Sales Code: HV002 **Barcode:** 5056678497173 **Brand:** nuie Choice **Description:** nuie choice Chrome Angled Radiator Valves



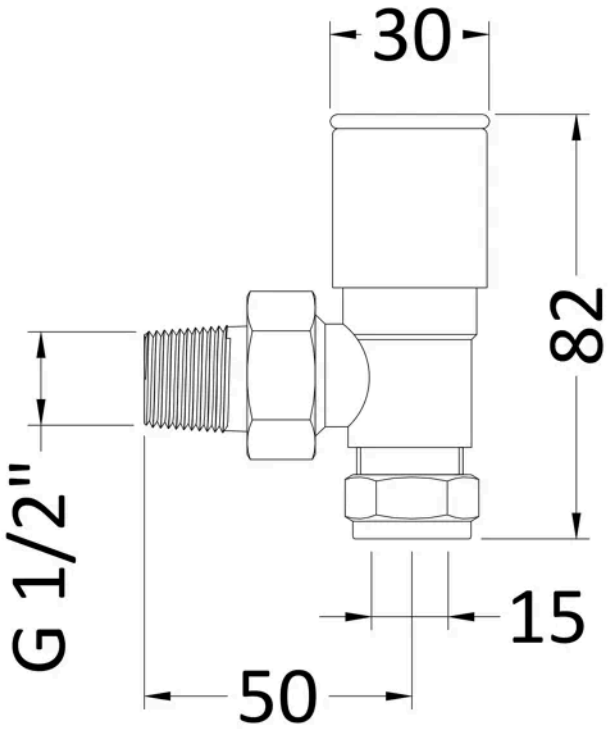

Product Dimensions

Product	82 x 26 x 65mm (H x W x D)
Packaged	40 x 90 x 135mm (H x W x D)
Nett Weight	0.2 kg
Packaged Weight	0.52 kg

Packaging Details

Box Qty	1

Product Details

Country of Origin	United Kingdom
Product Material	Steel
Colour/Finish	Chrome
Style	Contemporary

© ROXOR Group