Sales Code: HUN199 **Barcode:** 5056817725839 **Brand:** nuie Lux **Description:** nuie lux Hunton White Round Soft Close Toilet Seat With Quick Release Hinge



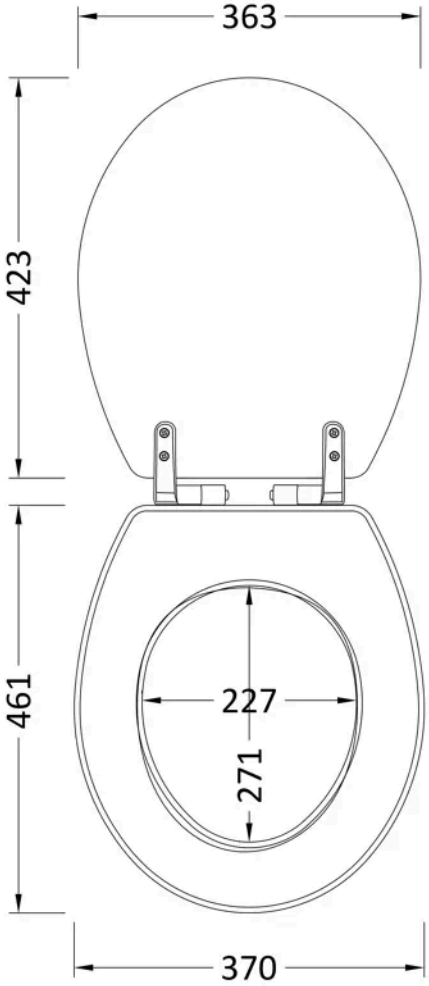

Product Dimensions

Product	60 x 350mm (H x W)
Packaged	97 x 470 x 375mm (H x W x D)
Outer Box	375mm (H)
Nett Weight	3 kg
Packaged Weight	3 kg

Packaging Details

Label Size (mm)	50 x 100
Label Colour	White
Label Qty	2.0000

Product Details

Country of Origin	China
Product Material	Mdf Vinyl,Zinc Alloy
Colour/Finish	Matt White
Style	Traditional
Fixings Included	Yes
Ce Certified	No
Hinge Centres (Max)	186 mm
Hinge Centres (Min)	150 mm
Toilet Seat Function	Soft Close
Toilet Seat Hinge Type	Quick Release
Toilet Seat Type	Round

© ROXOR Group