Sales Code: HUN103 **Barcode:** 5056817725150 **Brand:** nuie Lux **Description:** nuie lux Hunton White Traditional Full Pedestal for use with 640mm Basin



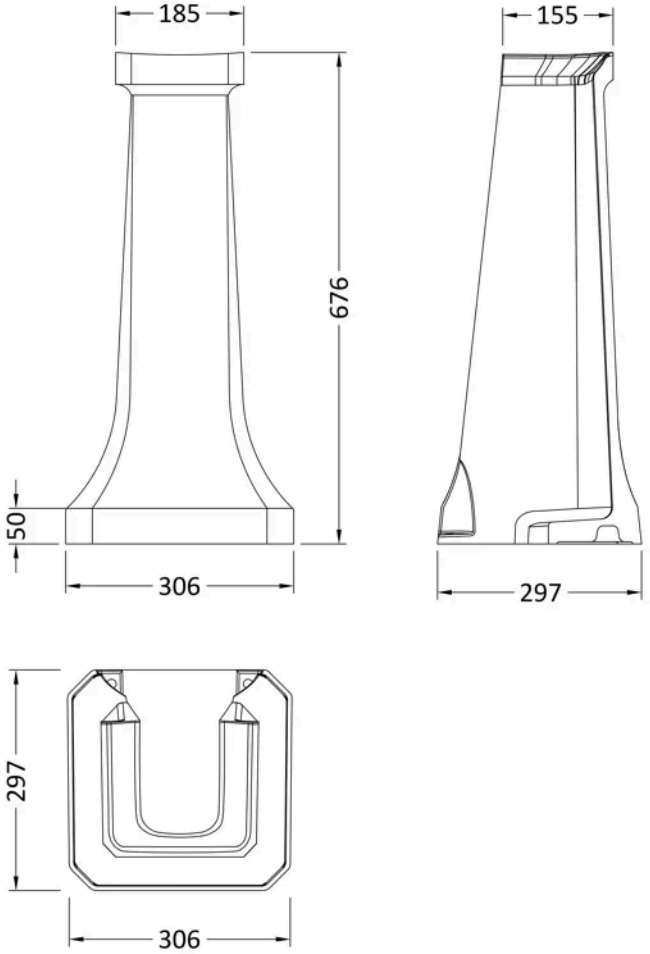

Product Dimensions

Product	685 x 260 x 265mm (H x W x D)
Packaged	690 x 315 x 315mm (H x W x D)
Nett Weight	12.4 kg
Packaged Weight	12.9 kg

Product Details

Country of Origin	China
Product Material	Ceramic
Colour/Finish	White
Mount Type	Floor
Style	Traditional
Ce Certified	Yes

© ROXOR Group