Sales Code: HUN101 **Barcode:** 5056817725051 **Brand:** nuie Lux **Description:** nuie lux Hunton Close Coupled Cistern & Fittings



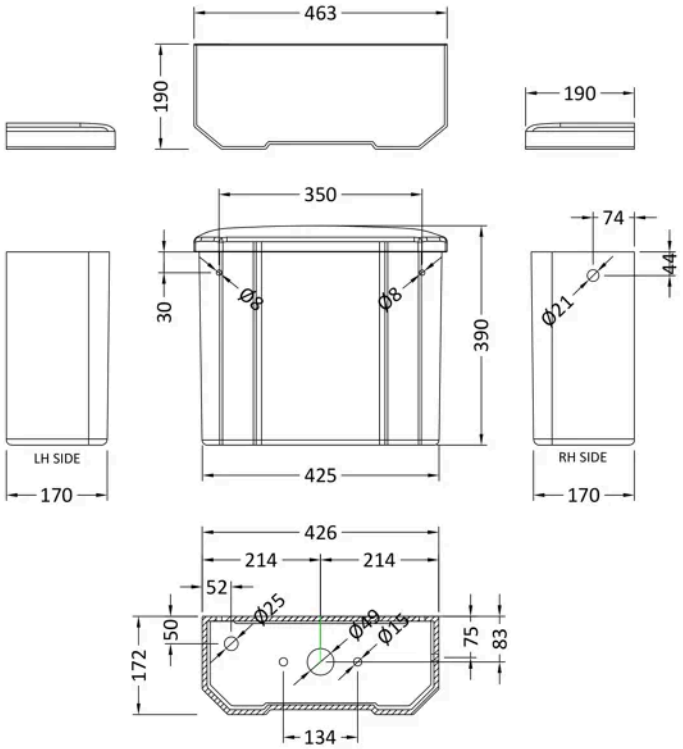

Product Dimensions

Product	387 x 460 x 190mm (H x W x D)
Packaged	447 x 205 x 470mm (H x W x D)
Nett Weight	15 kg
Packaged Weight	15 kg

Product Details

Country of Origin	China
Product Material	Vitreous China
Colour/Finish	White
Style	Traditional
Ce Certified	Yes
Includes Seat	No
Pan Type	Open To Wall

© ROXOR Group