Sales Code: HTD06

Barcode: 5055369003709

Brand: Hudson Reed

Description: Old London Harrow Chrome / White 963mm x 538mm Vertical Traditional Column Radiator



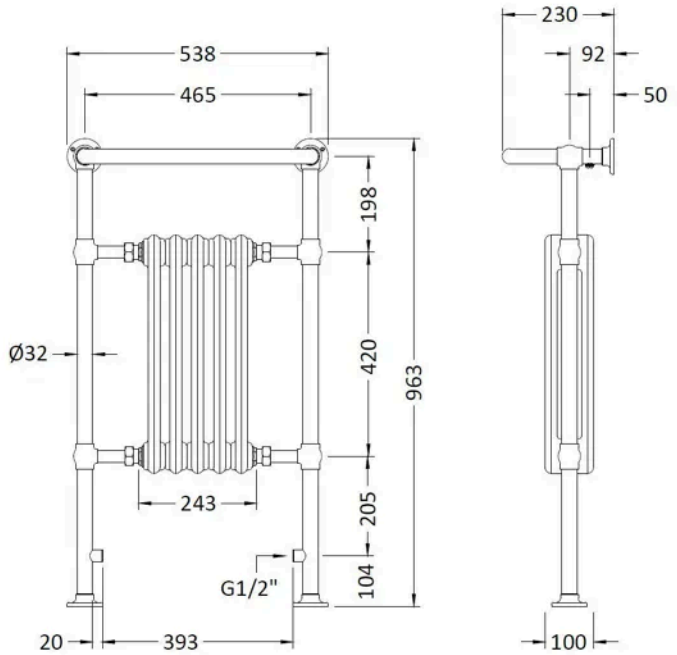

Product Dimensions

Product	963 x 538 x 230mm (H x W x D)
Packaged	294 x 590 x 1020mm (H x W x D)
Nett Weight	13 kg
Packaged Weight	16.2 kg

Packaging Details

Box Qty	1
Label Size (mm)	50 x 100
Label Colour	White
Label Qty	2.0000

Product Details

Country of Origin	China
Product Material	Steel
Colour/Finish	Chrome White
Mount Type	Floor
Style	Traditional
Pipe Centres	250
Brackets Included	Yes
Btu Output 30	662
Btu Output 50	1246
Ce Certified	Yes
Declaration Of Performance	Yes
Floor To Centre Tappings	105 mm
Fuel Type	Water
Maximum Projection	220 mm
Number Of Heat Settings	1.0000
Rohs Certification	No
Thermal Output 30	194.0000 Watts
Thermal Output 50	365.0000 Watts
Tube Diameter	32 mm
Ukca Certified	No
Wall To Centre Tappings	100 mm
Weee Certification	No

© ROXOR Group