Sales Code: HT301

Barcode: 5055146123583

Brand: Old London

Description: Old London Chrome 966mm x 673mm Heated Towels Rails Horizontal Single Panel Radiator



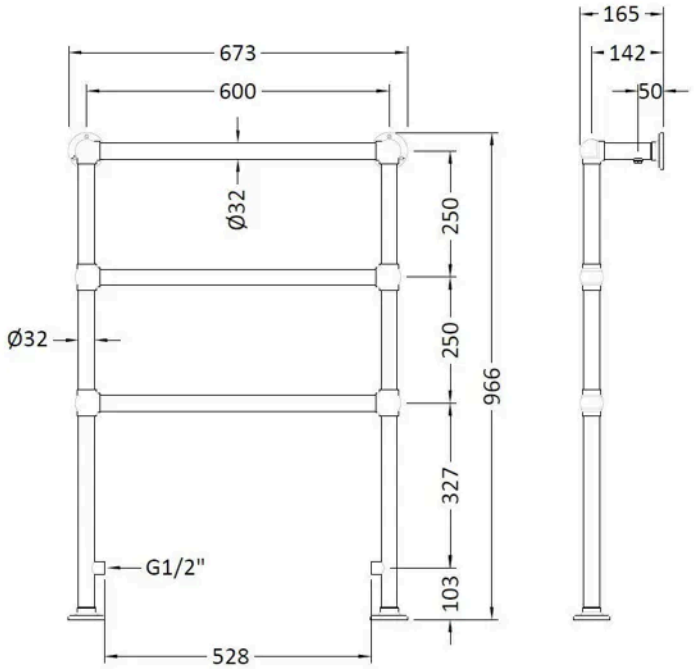

Product Dimensions

Product	966 x 673 x 165mm (H x W x D)
Packaged	180 x 695 x 990mm (H x W x D)
Nett Weight	6.35 kg
Packaged Weight	7.7 kg

Packaging Details

Box Qty	1
Label Size (mm)	50 x 100
Label Colour	White
Label Qty	2.0000

Product Details

Country of Origin	China
Product Material	Steel
Colour/Finish	Chrome
Mount Type	Floor
Style	Traditional
Pipe Centres	509
Brackets Included	Yes
Btu Output 30	287
Btu Output 50	546
Ce Certified	Yes
Declaration Of Performance	Yes
Floor To Centre Tappings	100 mm
Fuel Type	Water
Maximum Projection	160 mm
Number Of Heat Settings	1.0000
Rohs Certification	No
Thermal Output 30	84.0000 Watts
Thermal Output 50	160.0000 Watts
Tube Diameter	32 mm
Ukca Certified	No
Wall To Centre Tappings	145 mm
Weee Certification	No

© ROXOR Group