Sales Code: HEC600C **Barcode:** 5056817725693 **Brand:** nuie Lux **Description:** nuie lux Heacham Wall Hung Pan



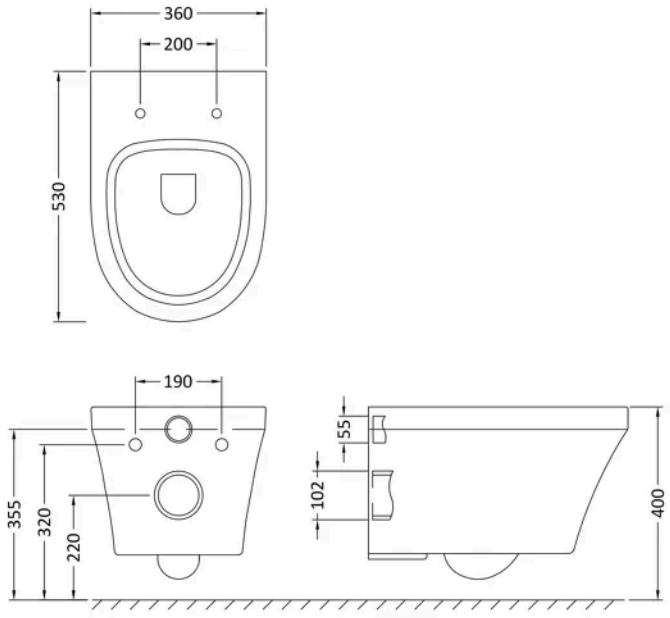

Product Dimensions

Product	400 x 360 x 530mm (H x W x D)
Packaged	400 x 360 x 550mm (H x W x D)
Nett Weight	32.7 kg
Packaged Weight	32.7 kg

Product Details

Country of Origin	Turkey
Product Material	Vitreous China
Colour/Finish	White
Style	Contemporary
Ce Certified	Yes
Includes Seat	No
Pan Type	Wall Hung

© ROXOR Group