Sales Code: HEC404 **Barcode:** 5056817725631 **Brand:** nuie Lux **Description:** nuie lux Heacham 1 Tap Hole 520mm Ceramic Basin



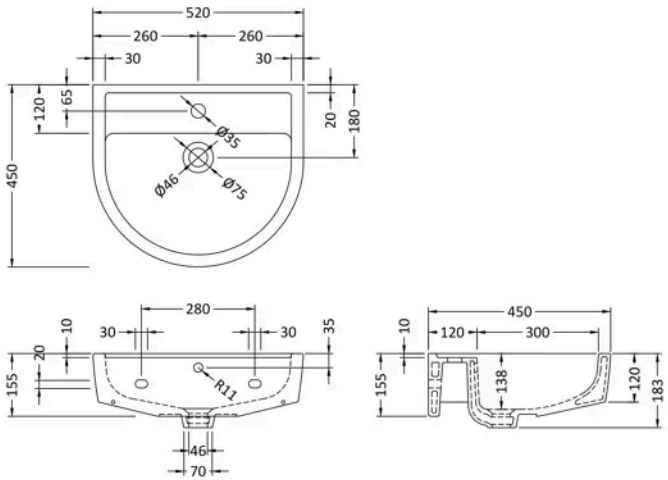

Product Dimensions

Product	183 x 520 x 450mm (H x W x D)
Packaged	200 x 545 x 460mm (H x W x D)
Nett Weight	15.5 kg
Packaged Weight	15.7 kg

Packaging Details

Box Qty	1

Product Details

Country of Origin	China
Product Material	Vitreous China
Colour/Finish	White
Style	Contemporary
Fixings Included	No
Ce Certified	Yes
Inner Bowl Height	130 mm
No. Of Tapholes	1
Number Of Bowls	1

© ROXOR Group