Sales Code: HEC402 **Barcode:** 5056817725648 **Brand:** nuie Lux **Description:** nuie lux Heacham 1 Tap Hole 420mm Ceramic Basin



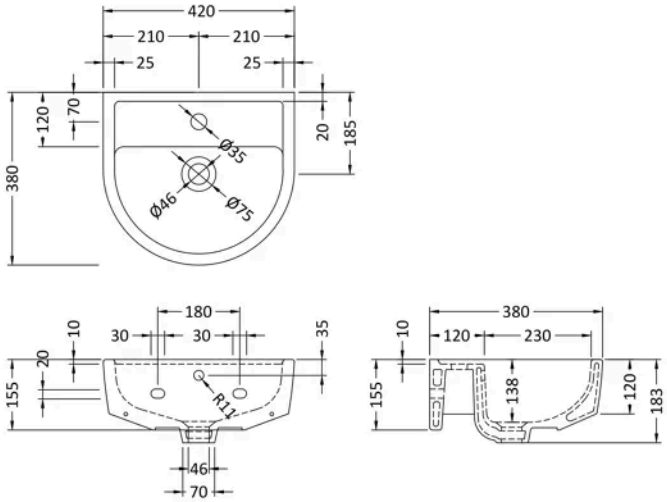

Product Dimensions

Product	183 x 420 x 380mm (H x W x D)
Packaged	200 x 440 x 400mm (H x W x D)
Nett Weight	10.3 kg
Packaged Weight	10.5 kg

Packaging Details

Box Qty	1

Product Details

Country of Origin	China
Product Material	Vitreous China
Colour/Finish	White
Style	Contemporary
Fixings Included	No
Ce Certified	Yes
Inner Bowl Height	130 mm
No. Of Tapholes	1
Number Of Bowls	1
Waste Included	No

© ROXOR Group