Sales Code: HEC009 **Barcode:** 5056817728564 **Brand:** nuie Lux **Description:** nuie lux Heacham Flush to Wall Toilet With Cistern & Seat



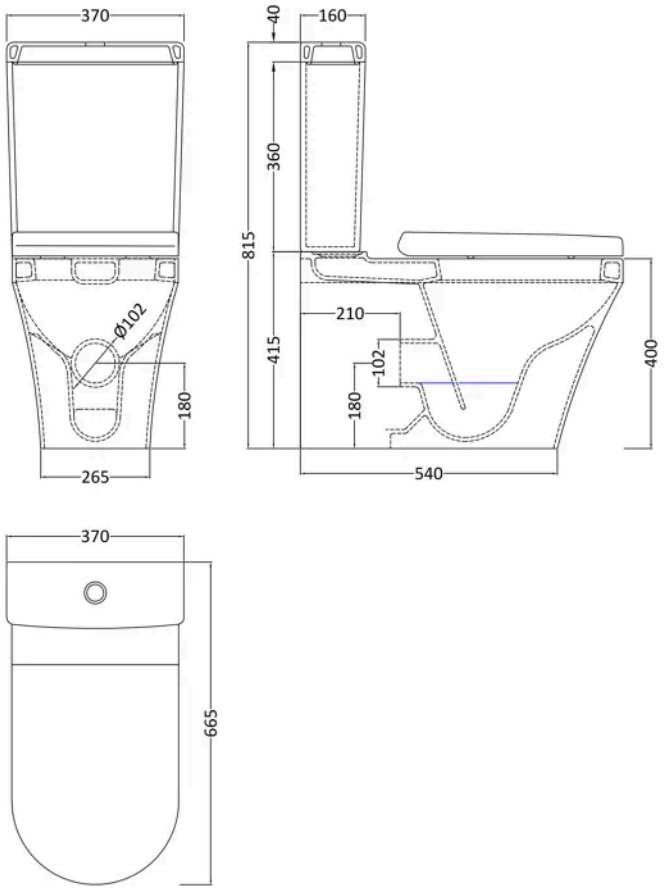

Product Dimensions

Product	815 x 370 x 665mm (H x W x D)
Packaged	550 x 550 x 550mm (H x W x D)
Nett Weight	51.89 kg
Packaged Weight	51.89 kg

Product Details

Country of Origin	Turkey
Product Material	Vitreous China
Colour/Finish	High Gloss White
Style	Contemporary
Ce Certified	Yes
Includes Seat	Yes
Pan Type	Flush To Wall

© ROXOR Group

Sales Code: HEC600 **Barcode:** 5056817725679 **Brand:** nuie Lux **Description:** nuie lux Heacham Back to Wall Toilet Pan



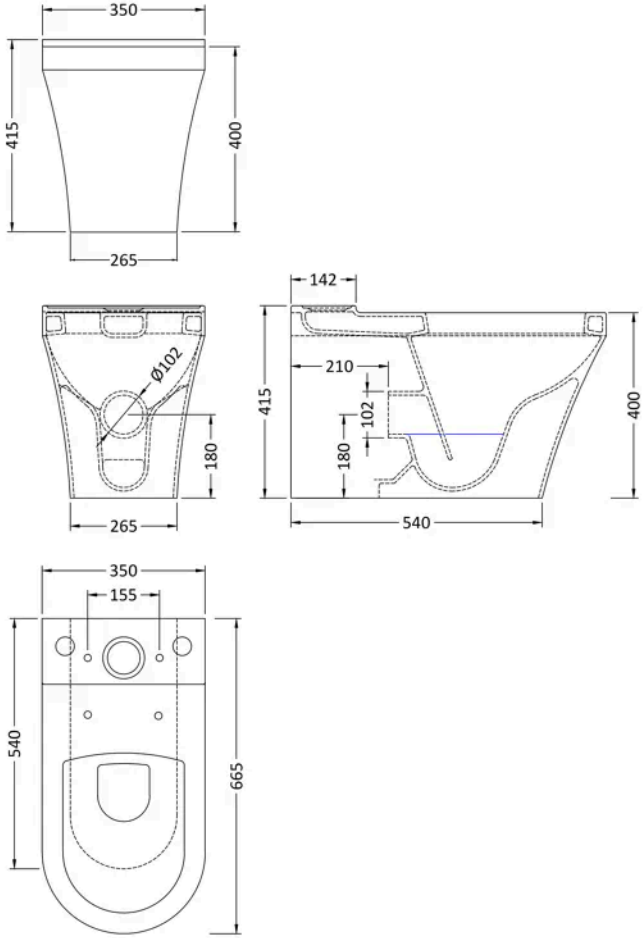

Product Dimensions

Product	400 x 350 x 665mm (H x W x D)
Packaged	430 x 370 x 710mm (H x W x D)
Nett Weight	31.9 kg
Packaged Weight	33.2 kg

Product Details

Country of Origin	Turkey
Product Material	Vitreous China
Colour/Finish	White
Style	Contemporary
Ce Certified	Yes
Includes Seat	No
Pan Type	Back To Wall

© ROXOR Group

Sales Code: HEC601 **Barcode:** 5056817725686 **Brand:** nuie Lux **Description:** nuie lux Heacham Back to Wall Close Coupled Cistern



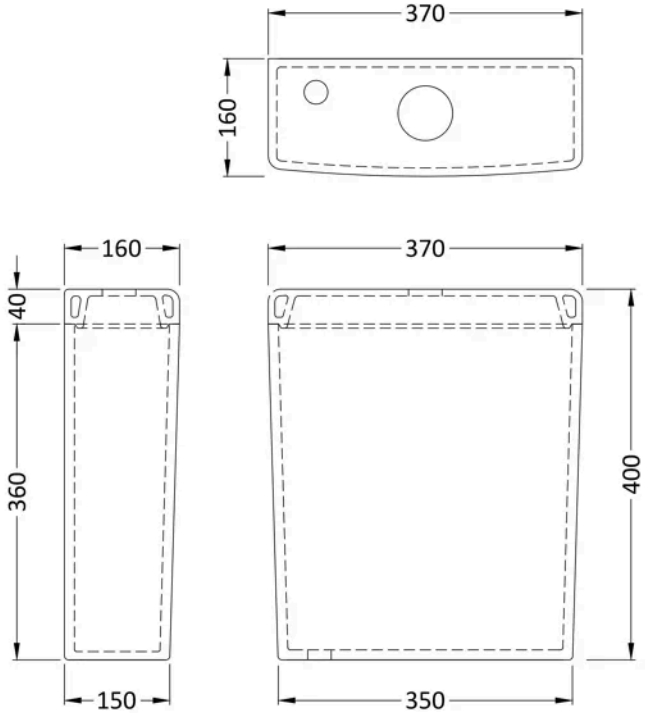

Product Dimensions

Packaged	385 x 480 x 185mm (H x W x D)
Nett Weight	15.05 kg
Packaged Weight	16.29 kg

Product Details

Country of Origin	Turkey
Ce Certified	Yes

© ROXOR Group

Sales Code: HEC699 **Barcode:** 5056817725716 **Brand:** nuie Lux **Description:** nuie lux Heacham White Round Soft Close Toilet Seat With Top Fix Hinge



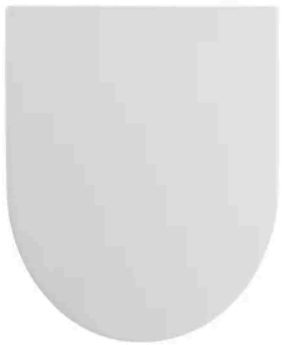

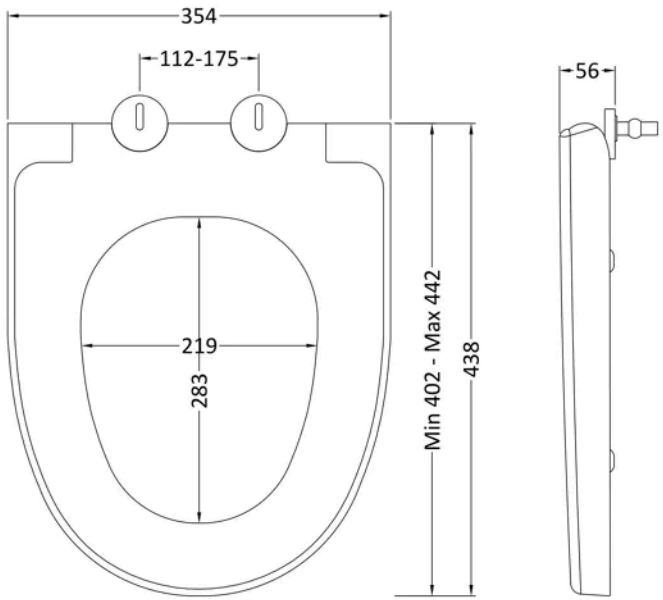

Product Dimensions

Product	56 x 354mm (H x W)
Packaged	50 x 500 x 365mm (H x W x D)
Outer Box	475mm (H)
Nett Weight	2.15 kg
Packaged Weight	2.4 kg

Packaging Details

Label Size (mm)	50 x 100
Label Qty	1.0000

Product Details

Country of Origin	Turkey
Product Material	Polypropylene
Colour/Finish	White
Style	Contemporary
Fixings Included	Yes
Hinge Centres (Max)	175 mm
Hinge Centres (Min)	112 mm
Toilet Seat Function	Soft Close
Toilet Seat Hinge Type	Top Fix
Toilet Seat Type	Round

© ROXOR Group