Sales Code: HEC004 **Barcode:** 5056817728540 **Brand:** nuie Lux **Description:** nuie lux Heacham 1 Tap Hole 420mm Ceramic Basin & Semi Pedestal



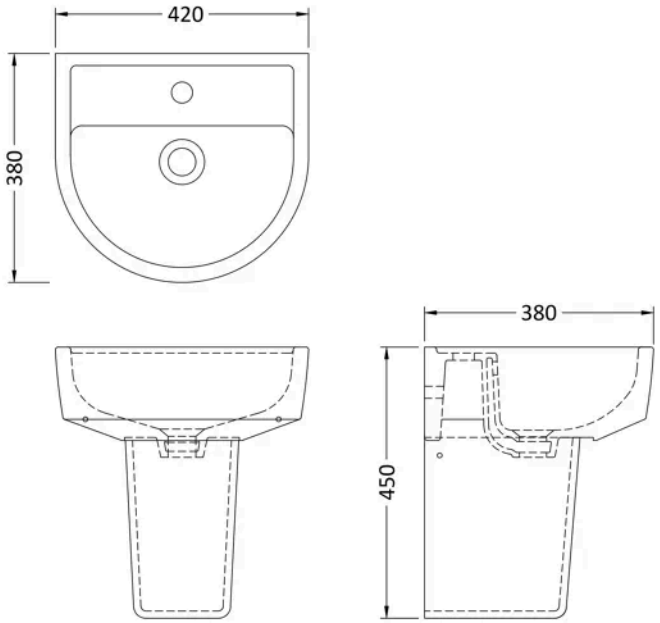

Product Dimensions

Product	450 x 420 x 380mm (H x W x D)
Packaged	550 x 550 x 550mm (H x W x D)
Nett Weight	18.6 kg
Packaged Weight	18.6 kg

Product Details

Country of Origin	China
Product Material	Vitreous China
Colour/Finish	White
Mount Type	Wall Hung
Style	Contemporary
Fixings Included	Yes
Ce Certified	Yes
Inner Bowl Depth	230 mm
Inner Bowl Height	130 mm
Inner Bowl Width	360 mm
No. Of Tapholes	1
Number Of Bowls	1
Overflow Cover Included	No
Overflow Included	Yes
Tap Included	No
Waste Included	No

© ROXOR Group

Sales Code: ACC020 **Barcode:** 5055369081806 **Brand:** nuie **Description:** Chrome Basin Fixing Bolts (Pair)



Technical Drawing Not Available

Product Dimensions

Packaged	20 x 120 x 150mm (H x W x D)
Nett Weight	0.6 kg
Packaged Weight	0.6 kg

Packaging Details

Box Qty	1

Product Details

Country of Origin	China
Product Material	Stainless Steel
Colour/Finish	Chrome
Style	Contemporary

© ROXOR Group

Sales Code: HEC402 **Barcode:** 5056817725648 **Brand:** nuie Lux **Description:** nuie lux Heacham 1 Tap Hole 420mm Ceramic Basin



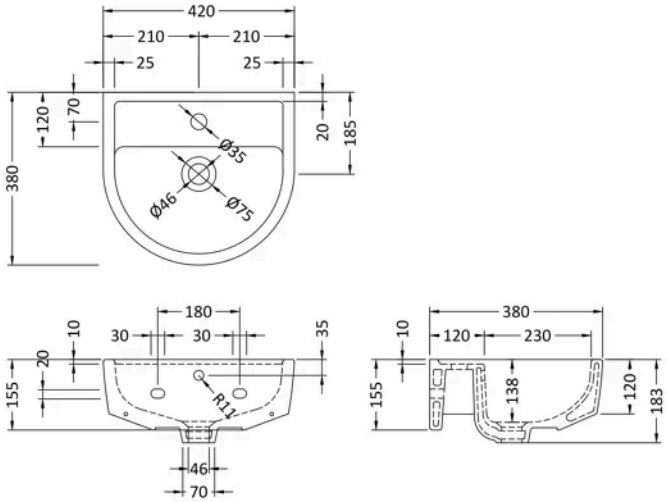

Product Dimensions

Product	183 x 420 x 380mm (H x W x D)
Packaged	200 x 440 x 400mm (H x W x D)
Nett Weight	10.3 kg
Packaged Weight	10.5 kg

Packaging Details

Box Qty	1

Product Details

Country of Origin	China
Product Material	Vitreous China
Colour/Finish	White
Style	Contemporary
Fixings Included	No
Ce Certified	Yes
Inner Bowl Height	130 mm
No. Of Tapholes	1
Number Of Bowls	1
Waste Included	No

© ROXOR Group

Sales Code: HEC407 **Barcode:** 5056817725662 **Brand:** nuie Lux **Description:** nuie lux Heacham White Contemporary Semi Pedestal



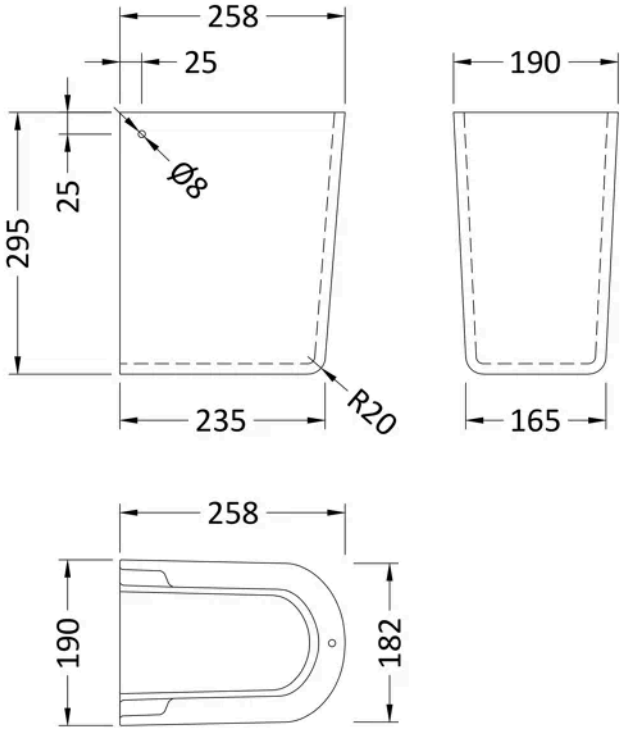

Product Dimensions

Product	295 x 190 x 258mm (H x W x D)
Packaged	330 x 230 x 300mm (H x W x D)
Nett Weight	7.3 kg
Packaged Weight	7.5 kg

Packaging Details

Box Qty	1

Product Details

Country of Origin	China
Product Material	Vitreous China
Colour/Finish	White
Style	Contemporary
Ce Certified	Yes

© ROXOR Group