Sales Code: HEAD45A **Barcode:** 5055275895924 **Brand:** Hudson Reed **Description:** Hudson Reed Chrome 400mm Square Ceiling Mounted Shower Head & Arm



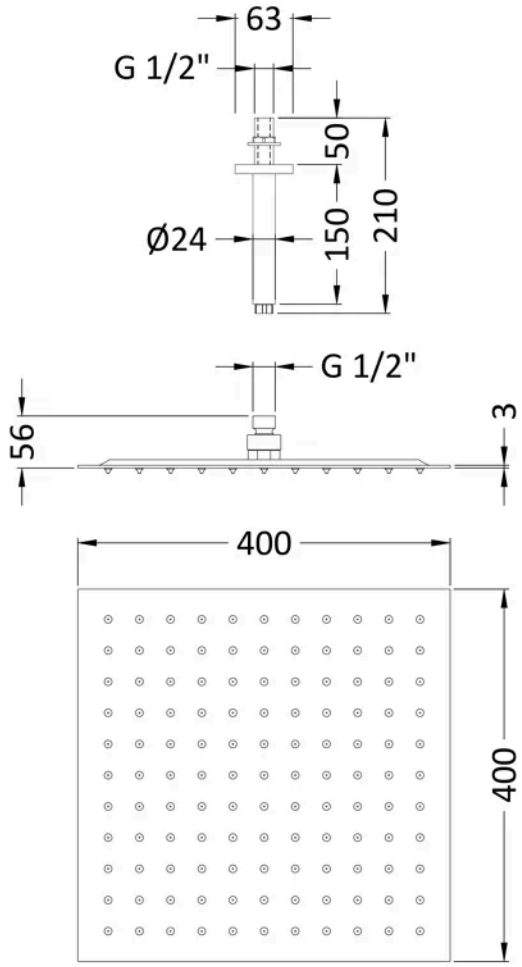

Product Dimensions

Product	266 x 400 x 400mm (H x W x D)
Packaged	90 x 440 x 440mm (H x W x D)
Nett Weight	2.9 kg
Packaged Weight	3.4 kg

Product Details

Country of Origin	China
Product Material	Stainless Steel
Colour/Finish	Chrome
Style	Contemporary

© ROXOR Group

Sales Code: ARM15 **Barcode:** 5055369013289 **Brand:** nuie **Description:** Chrome Wall-Mounted Shower Arm



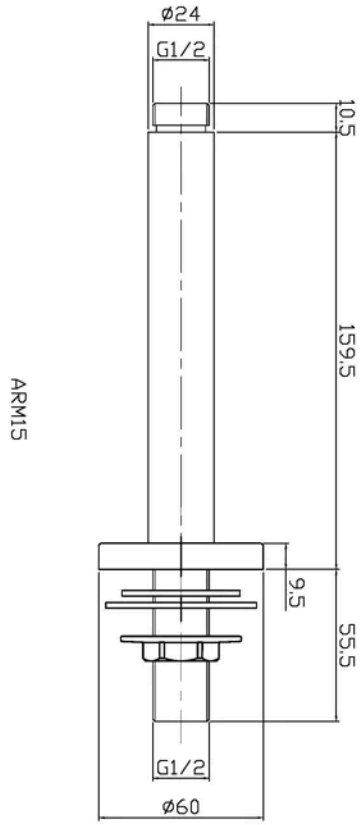

Product Dimensions

Product	210 x 63 x 63mm (H x W x D)
Packaged	40 x 100 x 230mm (H x W x D)
Outer Box	430 x 480 x 190mm (H x W x D)
Nett Weight	0.38 kg
Packaged Weight	0.38 kg

Packaging Details

Box Qty	1
Label Size (mm)	50 x 100
Label Colour	White
Label Qty	2.0000

Product Details

Country of Origin	China
Product Material	Brass
Colour/Finish	Chrome
Style	Contemporary

© ROXOR Group

Sales Code: HEAD45 **Barcode:** 5055369008933 **Brand:** Hudson Reed **Description:** Hudson Reed Chrome 400mm Fixed Shower Head

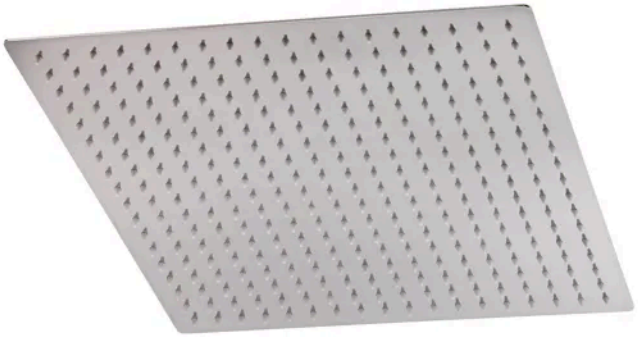

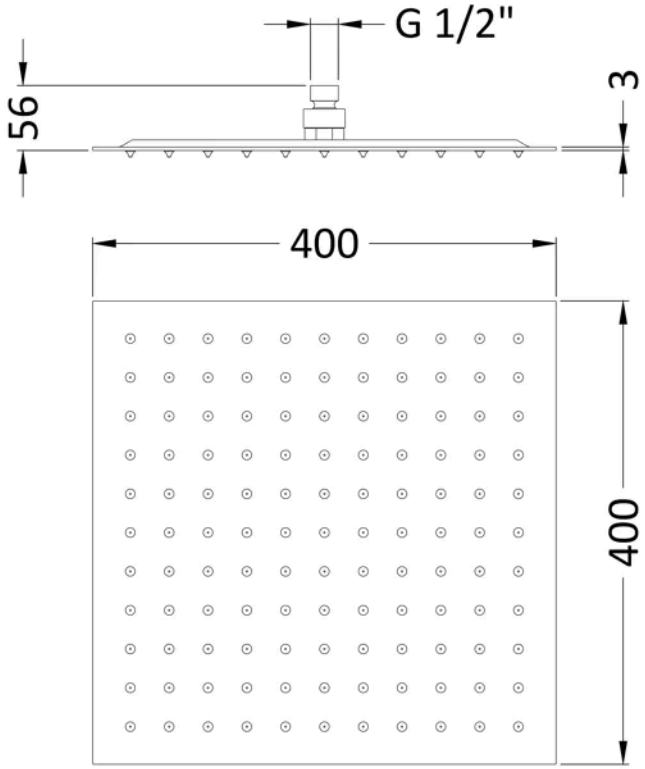

Product Dimensions

Product	56 x 400 x 400mm (H x W x D)
Packaged	90 x 440 x 440mm (H x W x D)
Outer Box	340 x 420 x 440mm (H x W x D)
Nett Weight	3.02 kg
Packaged Weight	3.52 kg

Packaging Details

Box Qty	1
Label Size (mm)	50 x 100
Label Colour	White
Label Qty	2.0000

Product Details

Country of Origin	China
Product Material	Stainless Steel
Control Type	Not Applicable
WRAS Approved	No
Colour/Finish	Chrome
Mount Type	Surface/Wall
Style	Contemporary
Easy Clean	Yes
TMV2 Approved	No
TMV3 Approved	No
Handset Included	No
Head Included	Yes
Min Operating Pressure	0.5 Bar
Outlet Elbow Supplied	No

© ROXOR Group