Sales Code: HE896B

Barcode: 5056883764008

Brand: Synergy

Description: Synergy Henbury Satin Green 800mm Wall Hung 1 Drawer Unit with Classic Basin 3 Tap Hole



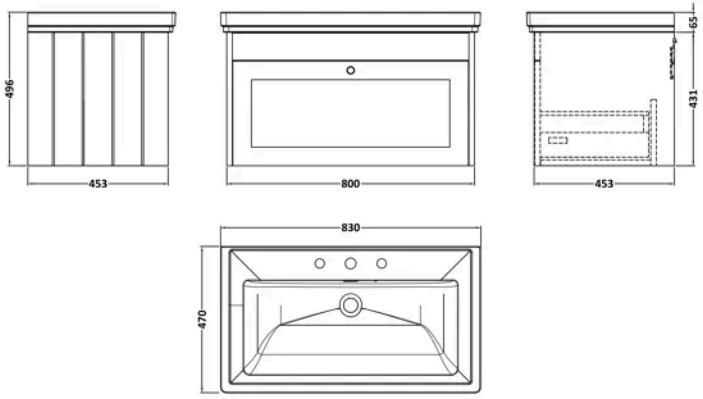

Product Dimensions

Product	496 x 830 x 471mm (H x W x D)
Packaged	465 x 825 x 480mm (H x W x D)
Nett Weight	45 kg
Packaged Weight	45 kg

Product Details

Country of Origin	China
Product Material	Mfc Painted Matt
Colour/Finish	Satin Green
Mount Type	Wall Hung
Style	Traditional
Handle Type	Knob
Construction Method	Cam & Wood Dowel
Construction Type	Rigid
Fascia Finish	Mfc Painted Matt
Handles Included	Yes
Inner Bowl Height	134 mm
Leg Set Included	No
Material Thickness	18 mm
No. Drawers	1
No. Of Tapholes	3
Number Of Bowls	1
Overflow Cover Included	Yes
Overflow Included	Yes
Tap Included	No
Waste Included	No
Waste Shroud	No

© ROXOR Group

Sales Code: SY-HEN55-GN **Barcode:** 5056474587887 **Brand:** Synergy **Description:** Synergy Henbury 800mm Satin Green 1 Drawer Wall Hung Vanity



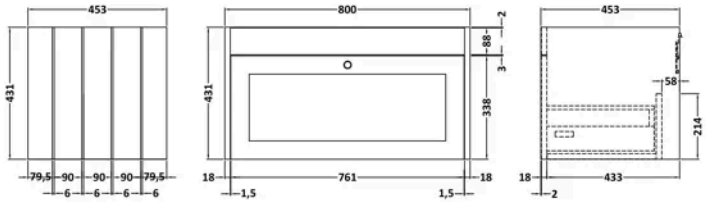

Product Dimensions

Product	431 x 800 x 453mm (H x W x D)
Packaged	465 x 825 x 480mm (H x W x D)
Nett Weight	23 kg
Packaged Weight	23.5 kg

Packaging Details

Box Qty	1

Product Details

Country of Origin	China
Product Material	Mfc Painted Matt
Colour/Finish	Satin Green
Mount Type	Wall Hung
Style	Traditional
Handle Type	Knob
Construction Method	Cam & Wood Dowel
Construction Type	Rigid
Drawer Type	80mm High Metal S/C Inc Gallery
Fascia Finish	Mdf Painted Matt
Handles Included	Yes
Material Thickness	16 mm
No. Drawers	1
Waste Shroud	Yes

© ROXOR Group

Sales Code: SY-HEN800CQ3 **Barcode:** 5056474588228 **Brand:** Synergy **Description:** Synergy Henbury 800mm 3 Tap Hole Traditional Fireclay Basin



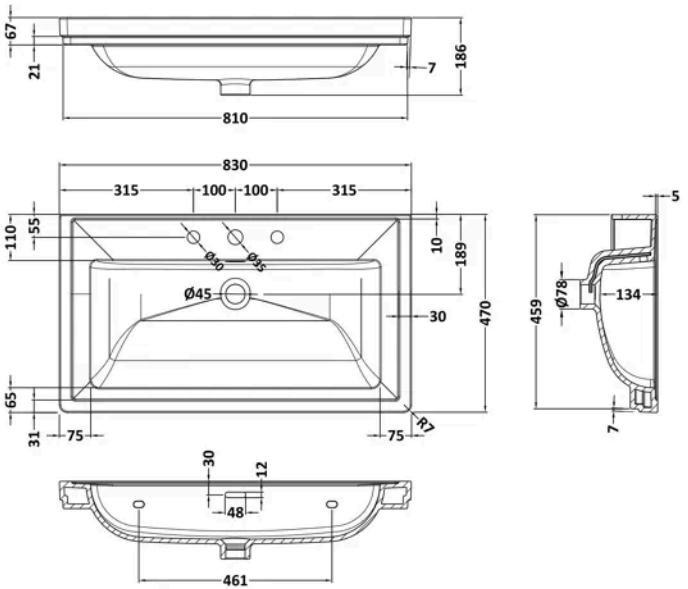

Product Dimensions

Product	186 x 830 x 470mm (H x W x D)
Packaged	490 x 850 x 220mm (H x W x D)
Nett Weight	21.5 kg
Packaged Weight	21.5 kg

Packaging Details

Box Qty	1
Label Size (mm)	50 x 100
Label Colour	White
Label Qty	2.0000

Product Details

Country of Origin	United Arab Emirates
Product Material	Fireclay
Colour/Finish	White
Style	Contemporary
Bottle Trap Included	No
Ce Certified	Yes
Inner Bowl Depth	295 mm
Inner Bowl Height	134 mm
Inner Bowl Width	680 mm
No. Of Tapholes	3
Number Of Bowls	1
Overflow Cover Included	No
Overflow Included	Yes
Tap Included	No
Waste Included	No

© ROXOR Group