**Sales Code:** HE823B

**Barcode:** 5056883761342

**Brand:** Synergy

**Description:** Synergy Henbury Satin Green 500mm Floor Standing 2 Door Unit with Classic Basin 3 Tap Hole



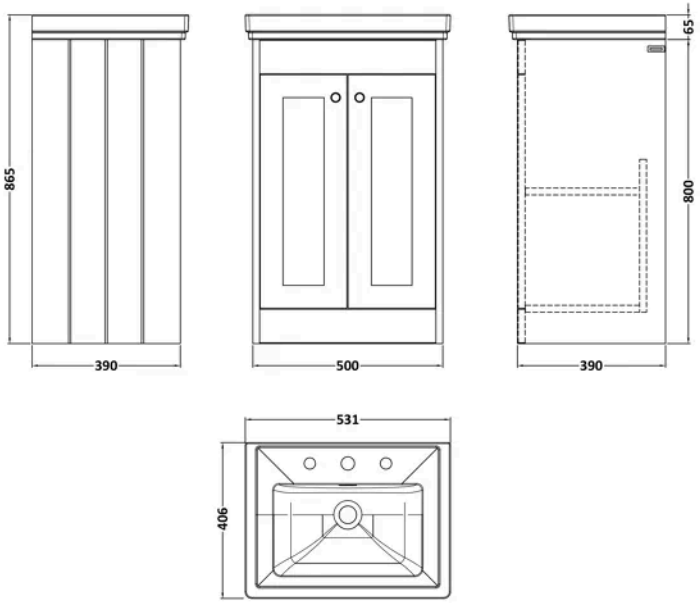


## Product Dimensions

| | |
|---|---|
| Product | 865 x 531 x 406mm (H x W x D) |
| Packaged | 835 x 525 x 415mm (H x W x D) |
| Nett Weight | 35 kg |
| Packaged Weight | 35 kg |

## Product Details

| | |
|---|---|
| Country of Origin | China |
| Product Material | Mfc Painted Matt |
| Colour/Finish | Satin Green |
| Mount Type | Floor |
| Style | Traditional |
| Handle Type | Knob |
| Construction Method | Cam & Wood Dowel |
| Construction Type | Rigid |
| Fascia Finish | Mfc Painted Matt |
| Handles Included | Yes |
| Inner Bowl Height | 136 mm |
| Leg Set Included | No |
| Material Thickness | 18 mm |
| No. Doors | 2 |
| No. Of Tapholes | 3 |
| Number Of Bowls | 1 |
| Overflow Cover Included | Yes |
| Overflow Included | Yes |
| Tap Included | No |
| Waste Included | No |

© ROXOR Group

**Sales Code:** SY-HEN50-GN **Barcode:** 5056474587634 **Brand:** Synergy **Description:** Synergy Henbury 500mm Satin Green 2 Door Floor Standing Vanity Unit



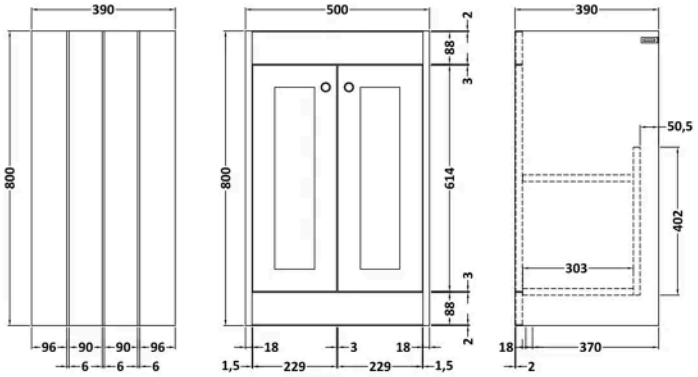


## Product Dimensions

| | |
|---|---|
| Product | 800 x 500 x 390mm (H x W x D) |
| Packaged | 835 x 525 x 415mm (H x W x D) |
| Nett Weight | 21 kg |
| Packaged Weight | 21.5 kg |

## Packaging Details

| | |
|---|---|
| Box Qty | 1 |

## Product Details

| | |
|---|---|
| Country of Origin | China |
| Product Material | Mfc Painted Matt |
| Colour/Finish | Satin Green |
| Mount Type | Floor |
| Style | Traditional |
| Handle Type | Knob |
| Construction Method | Cam & Wood Dowel |
| Construction Type | Rigid |
| Fascia Finish | Mdf Painted Matt |
| Handles Included | Yes |
| Material Thickness | 16 mm |
| No. Doors | 2 |
| No. Shelves | 1 |
| Number Of Shelves | 1 |

© ROXOR Group

**Sales Code:** SY-HEN500CQ2 **Barcode:** 5056474588167 **Brand:** Synergy **Description:** Synergy Henbury 500mm 3 Tap Hole Traditional Fireclay Basin



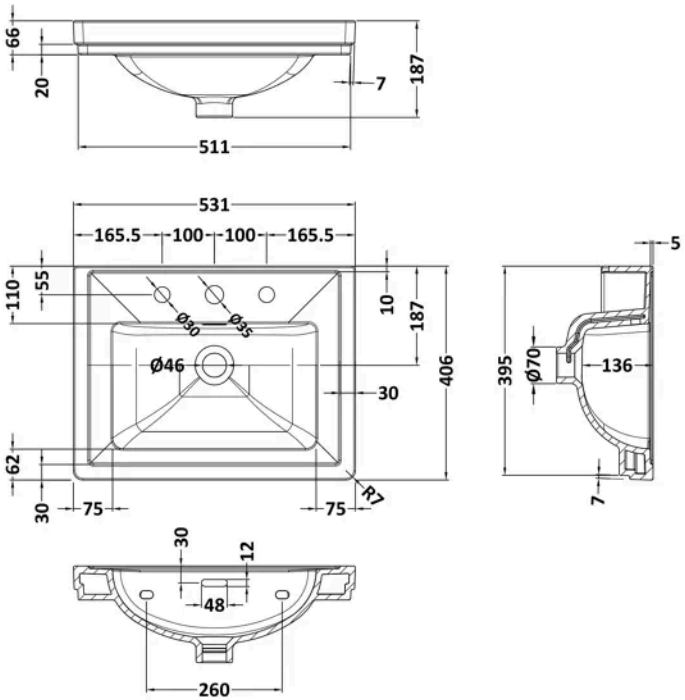


## Product Dimensions

| | |
|---|---|
| Product | 187 x 531 x 406mm (H x W x D) |
| Packaged | 430 x 550 x 220mm (H x W x D) |
| Nett Weight | 13.5 kg |
| Packaged Weight | 13.5 kg |

## Packaging Details

| | |
|---|---|
| Box Qty | 1 |

## Product Details

| | |
|---|---|
| Country of Origin | United Arab Emirates |
| Product Material | Fireclay |
| Colour/Finish | White |
| Style | Contemporary |
| Ce Certified | Yes |
| Inner Bowl Height | 136 mm |
| No. Of Tapholes | 3 |
| Number Of Bowls | 1 |
| Overflow Included | Yes |
| Tap Included | No |
| Waste Included | No |

© ROXOR Group