Sales Code: HE3296WS1

Barcode: 5056883764213

Brand: Synergy

Description: Synergy Henbury Pebble Grey 800mm Satin Wall Hung 1 Drawer Unit with Marble Top 1 Tap Hole



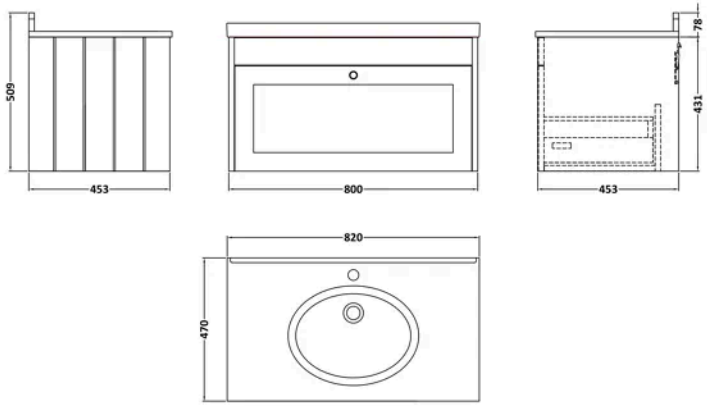

Product Dimensions

Product	509 x 820 x 470mm (H x W x D)
Packaged	465 x 825 x 480mm (H x W x D)
Nett Weight	44.5 kg
Packaged Weight	44.5 kg

Product Details

Country of Origin	China
Product Material	Mfc Painted Matt
Colour/Finish	Pebble Grey
Mount Type	Wall Hung
Style	Traditional
Handle Type	Knob
Construction Method	Cam & Wood Dowel
Construction Type	Rigid
Fascia Finish	Mfc Painted Matt
Handles Included	Yes
Inner Bowl Height	160 mm
Leg Set Included	No
Material Thickness	18 mm
No. Drawers	1
No. Of Tapholes	1
Number Of Bowls	1
Overflow Cover Included	Yes
Overflow Included	Yes
Tap Included	No
Waste Included	No

© ROXOR Group

Sales Code: SY-HEN55-PG **Barcode:** 5056474587894 **Brand:** Synergy **Description:** Synergy Henbury 800mm Satin Pebble Grey 1 Drawer Wall Hung Vanity



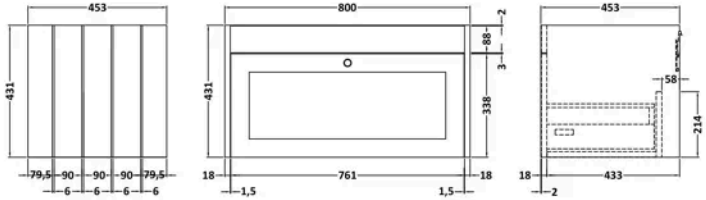

Product Dimensions

Product	431 x 800 x 453mm (H x W x D)
Packaged	465 x 825 x 480mm (H x W x D)
Nett Weight	23 kg
Packaged Weight	23.5 kg

Packaging Details

Box Qty	1

Product Details

Country of Origin	China
Product Material	Mfc Painted Matt
Colour/Finish	Satin Pebble Grey
Mount Type	Wall Hung
Style	Traditional
Handle Type	Knob
Construction Method	Cam & Wood Dowel
Construction Type	Rigid
Drawer Type	80mm High Metal S/C Inc Gallery
Fascia Finish	Mdf Painted Matt
Handles Included	Yes
Material Thickness	16 mm
No. Drawers	1
Waste Shroud	Yes

© ROXOR Group

Sales Code: SY-HEN800BCM

Barcode: 5056474588396

Brand: Synergy

Description: Synergy Henbury 800mm 1 Tap Hole White Single Square Bowl Marble Worktop Basin



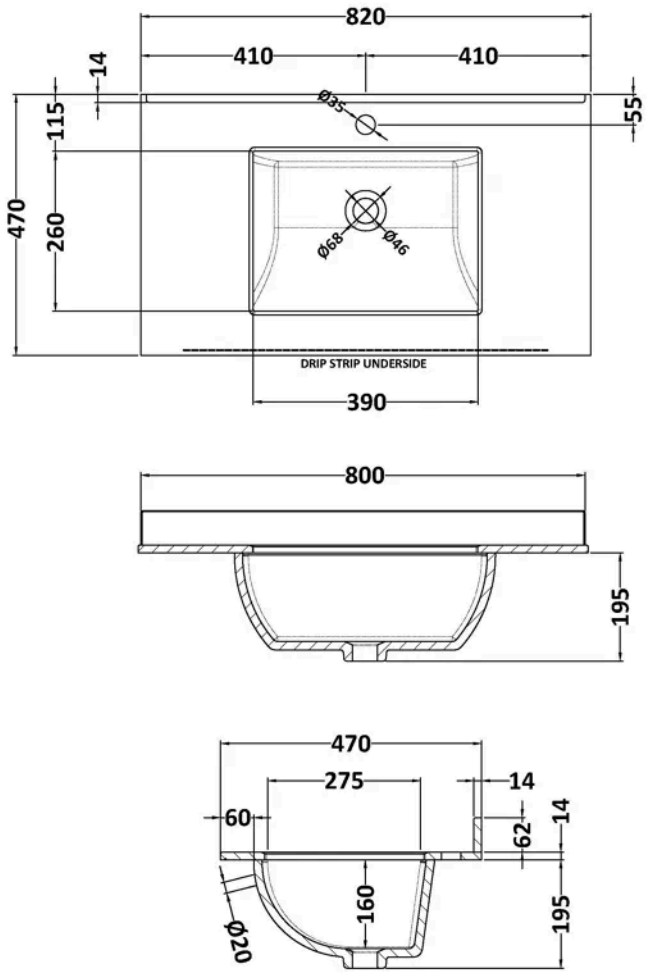

Product Dimensions

Product	209 x 820 x 463mm (H x W x D)
Packaged	250 x 900 x 580mm (H x W x D)
Nett Weight	20.5 kg
Packaged Weight	21 kg

Packaging Details

Box Qty	1
Label Size (mm)	50 x 100
Label Colour	White
Label Qty	2.0000

Product Details

Country of Origin	China
Product Material	Vitreous China
Colour/Finish	White
Style	Traditional
Bottle Trap Included	No
Ce Certified	Yes
Inner Bowl Depth	275 mm
Inner Bowl Height	160 mm
Inner Bowl Width	390 mm
No. Of Tapholes	1
Number Of Bowls	1
Overflow Cover Included	No
Overflow Included	Yes
Tap Included	No
Waste Included	No

© ROXOR Group