Sales Code: HE3294WS1

Barcode: 5056883763513

Brand: Synergy

Description: Synergy Henbury Pebble Grey 600mm Satin Wall Hung 1 Drawer Unit with Marble Top 1 Tap Hole



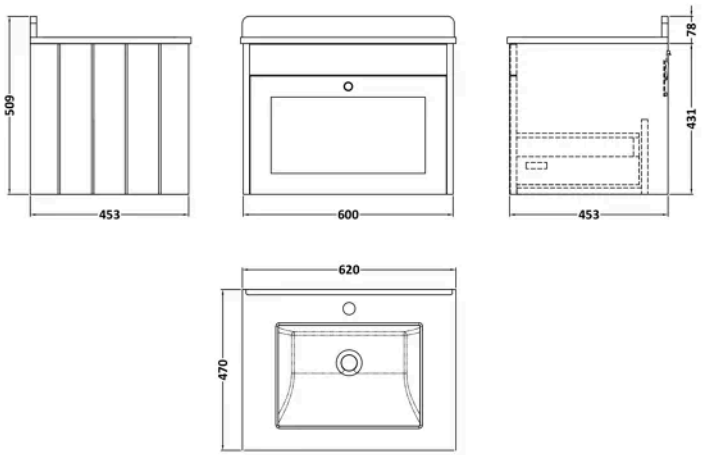

Product Dimensions

Product	509 x 620 x 470mm (H x W x D)
Packaged	465 x 625 x 480mm (H x W x D)
Nett Weight	36.5 kg
Packaged Weight	36.5 kg

Product Details

Country of Origin	China
Product Material	Mfc Painted Matt
Colour/Finish	Pebble Grey
Mount Type	Wall Hung
Style	Traditional
Handle Type	Knob
Construction Method	Cam & Wood Dowel
Construction Type	Rigid
Fascia Finish	Mfc Painted Matt
Handles Included	Yes
Inner Bowl Height	160 mm
Leg Set Included	No
Material Thickness	18 mm
No. Drawers	1
No. Of Tapholes	1
Number Of Bowls	1
Overflow Cover Included	Yes
Overflow Included	Yes
Tap Included	No
Waste Included	No

© ROXOR Group

Sales Code: SY-HEN54-PG **Barcode:** 5056474587849 **Brand:** Synergy **Description:** Synergy Henbury 600mm Satin Pebble Grey 1 Drawer Wall Hung Vanity



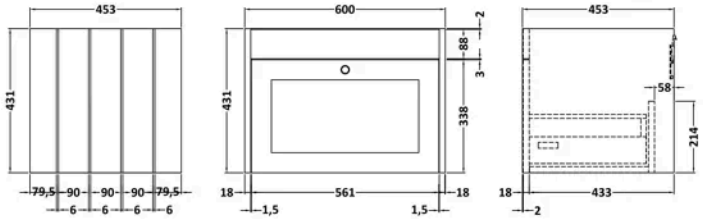

Product Dimensions

Product	431 x 600 x 453mm (H x W x D)
Packaged	465 x 625 x 480mm (H x W x D)
Nett Weight	19 kg
Packaged Weight	19.5 kg

Packaging Details

Box Qty	1

Product Details

Country of Origin	China
Product Material	Mfc Painted Matt
Colour/Finish	Satin Pebble Grey
Mount Type	Wall Hung
Style	Traditional
Handle Type	Knob
Construction Method	Cam & Wood Dowel
Construction Type	Rigid
Drawer Type	80mm High Metal S/C Inc Gallery
Fascia Finish	Mdf Painted Matt
Handles Included	Yes
Material Thickness	16 mm
No. Drawers	1
Waste Shroud	Yes

© ROXOR Group

Sales Code: SY-HEN600BCM

Barcode: 5056474588389

Brand: Synergy

Description: Synergy Henbury 600mm 1 Tap Hole White Single Square Bowl Marble Worktop Basin



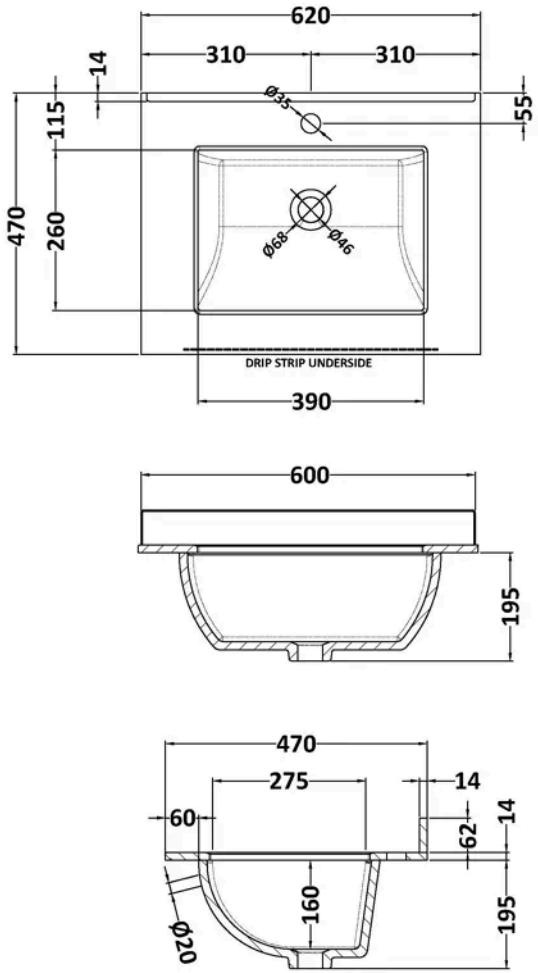

Product Dimensions

Product	209 x 620 x 470mm (H x W x D)
Packaged	250 x 700 x 580mm (H x W x D)
Nett Weight	16.5 kg
Packaged Weight	17 kg

Packaging Details

Box Qty	1
Label Size (mm)	50 x 100
Label Colour	White
Label Qty	2.0000

Product Details

Country of Origin	China
Product Material	Vitreous China
Colour/Finish	White
Style	Traditional
Bottle Trap Included	No
Ce Certified	Yes
Inner Bowl Depth	275 mm
Inner Bowl Height	160 mm
Inner Bowl Width	390 mm
No. Of Tapholes	1
Number Of Bowls	1
Overflow Cover Included	No
Overflow Included	Yes
Tap Included	No
Waste Included	No

© ROXOR Group