**Sales Code:** HE3294E

**Barcode:** 5056883763414

**Brand:** Synergy

**Description:** Synergy Henbury Pebble Grey 600mm Satin Wall Hung 1 Drawer Unit with Thin Edge Basin 1 Tap Hole



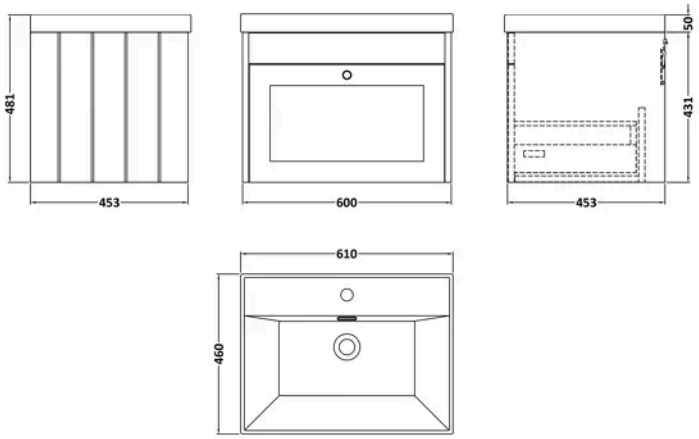


## Product Dimensions

| | |
|---|---|
| Product | 461 x 610 x 460mm (H x W x D) |
| Packaged | 465 x 625 x 480mm (H x W x D) |
| Nett Weight | 33.5 kg |
| Packaged Weight | 33.5 kg |

## Product Details

| | |
|---|---|
| Country of Origin | China |
| Product Material | Mfc Painted Matt |
| Colour/Finish | Pebble Grey |
| Mount Type | Wall Hung |
| Style | Traditional |
| Handle Type | Knob |
| Construction Method | Cam & Wood Dowel |
| Construction Type | Rigid |
| Fascia Finish | Mfc Painted Matt |
| Handles Included | Yes |
| Inner Bowl Height | 160 mm |
| Leg Set Included | No |
| Material Thickness | 18 mm |
| No. Drawers | 1 |
| No. Of Tapholes | 1 |
| Number Of Bowls | 1 |
| Overflow Cover Included | Yes |
| Overflow Included | Yes |
| Tap Included | No |
| Waste Included | No |

© ROXOR Group

**Sales Code:** SY-HEN54-PG **Barcode:** 5056474587849 **Brand:** Synergy **Description:** Synergy Henbury 600mm Satin Pebble Grey 1 Drawer Wall Hung Vanity



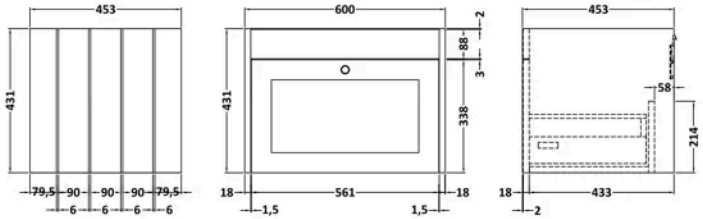


## Product Dimensions

| | |
|---|---|
| Product | 431 x 600 x 453mm (H x W x D) |
| Packaged | 465 x 625 x 480mm (H x W x D) |
| Nett Weight | 19 kg |
| Packaged Weight | 19.5 kg |

## Packaging Details

| | |
|---|---|
| Box Qty | 1 |

## Product Details

| | |
|---|---|
| Country of Origin | China |
| Product Material | Mfc Painted Matt |
| Colour/Finish | Satin Pebble Grey |
| Mount Type | Wall Hung |
| Style | Traditional |
| Handle Type | Knob |
| Construction Method | Cam & Wood Dowel |
| Construction Type | Rigid |
| Drawer Type | 80mm High Metal S/C Inc Gallery |
| Fascia Finish | Mdf Painted Matt |
| Handles Included | Yes |
| Material Thickness | 16 mm |
| No. Drawers | 1 |
| Waste Shroud | Yes |

© ROXOR Group

**Sales Code:** SY-HEN600T **Barcode:** 5056474588129 **Brand:** Synergy **Description:** Synergy Henbury 1 Tap Hole 600mm Thin Edge Ceramic Basin



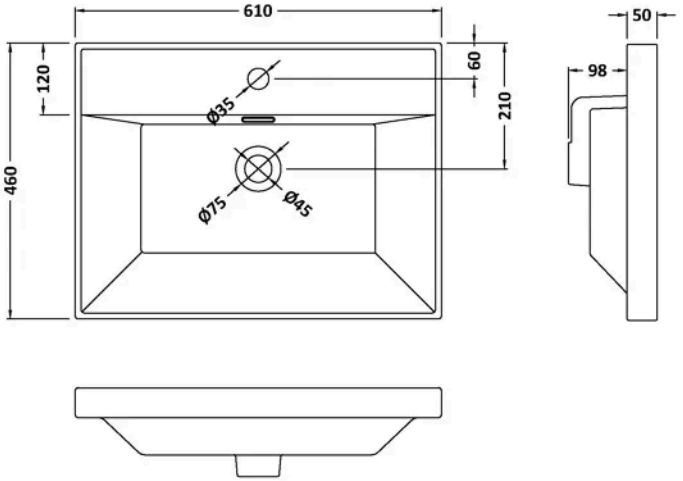


## Product Dimensions

| | |
|---|---|
| Product | 148 x 610 x 460mm (H x W x D) |
| Packaged | 170 x 625 x 480mm (H x W x D) |
| Nett Weight | 13.5 kg |
| Packaged Weight | 14 kg |

## Packaging Details

| | |
|---|---|
| Box Qty | 1 |
| Label Size (mm) | 100 x 50 |
| Label Colour | White |
| Label Qty | 2.0000 |

## Product Details

| | |
|---|---|
| Country of Origin | United Arab Emirates |
| Product Material | Vitreous China |
| Colour/Finish | White |
| Style | Contemporary |
| Fixings Included | No |
| Bottle Trap Included | No |
| Ce Certified | Yes |
| Inner Bowl Depth | 270 mm |
| Inner Bowl Height | 125 mm |
| Inner Bowl Width | 600 mm |
| No. Of Tapholes | 1 |
| Number Of Bowls | 1 |
| Overflow Cover Included | No |
| Overflow Included | Yes |
| Tap Included | No |
| Waste Included | No |

© ROXOR Group