**Sales Code:** HE3225K

**Barcode:** 5056883761908

**Brand:** Synergy

**Description:** Synergy Henbury Pebble Grey 600mm Satin Floor Standing 2 Door Unit with Minimalist Basin No Tap Hole



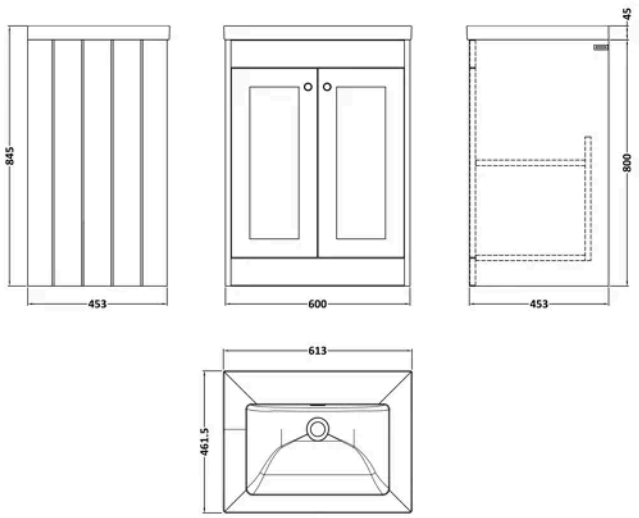


## Product Dimensions

| | |
|---|---|
| Product | 845 x 613 x 462mm (H x W x D) |
| Packaged | 835 x 625 x 480mm (H x W x D) |
| Nett Weight | 42.8 kg |
| Packaged Weight | 42.8 kg |

## Product Details

| | |
|---|---|
| Country of Origin | China |
| Product Material | Mfc Painted Matt |
| Colour/Finish | Pebble Grey |
| Mount Type | Floor |
| Style | Traditional |
| Handle Type | Knob |
| Construction Method | Cam & Wood Dowel |
| Construction Type | Rigid |
| Fascia Finish | Mfc Painted Matt |
| Handles Included | Yes |
| Inner Bowl Height | 135 mm |
| Leg Set Included | No |
| Material Thickness | 18 mm |
| No. Doors | 2 |
| No. Of Tapholes | No Tapholes |
| Number Of Bowls | 1 |
| Overflow Cover Included | Yes |
| Overflow Included | Yes |
| Tap Included | No |
| Waste Included | No |

© ROXOR Group

**Sales Code:** SY-HEN51-PG **Barcode:** 5056474587696 **Brand:** Synergy **Description:** Synergy Henbury 600mm Satin Pebble Grey 2 Door Floor Standing Vanity



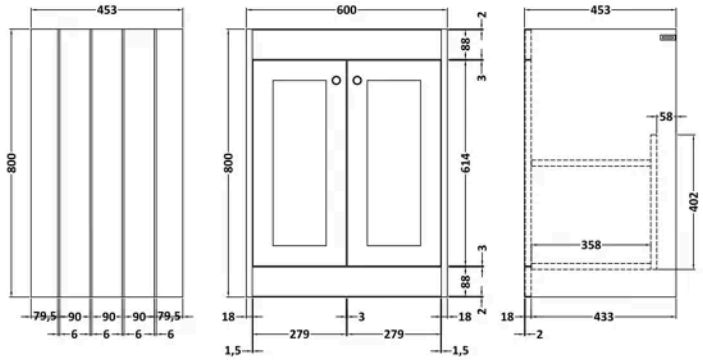


## Product Dimensions

| | |
|---|---|
| Product | 800 x 600 x 453mm (H x W x D) |
| Packaged | 835 x 625 x 480mm (H x W x D) |
| Nett Weight | 25.3 kg |
| Packaged Weight | 25.8 kg |

## Packaging Details

| | |
|---|---|
| Box Qty | 1 |

## Product Details

| | |
|---|---|
| Country of Origin | China |
| Product Material | Mfc Painted Matt |
| Colour/Finish | Satin Pebble Grey |
| Mount Type | Floor |
| Style | Traditional |
| Handle Type | Knob |
| Construction Method | Cam & Wood Dowel |
| Construction Type | Rigid |
| Fascia Finish | Mdf Painted Matt |
| Handles Included | Yes |
| Material Thickness | 16 mm |
| No. Doors | 2 |
| No. Shelves | 1 |
| Number Of Shelves | 1 |

© ROXOR Group

**Sales Code:** SY-HEN600CT0 **Barcode:** 5056474588235 **Brand:** Synergy **Description:** Synergy Henbury 600mm No Tap Hole Contemporary Fireclay Basin



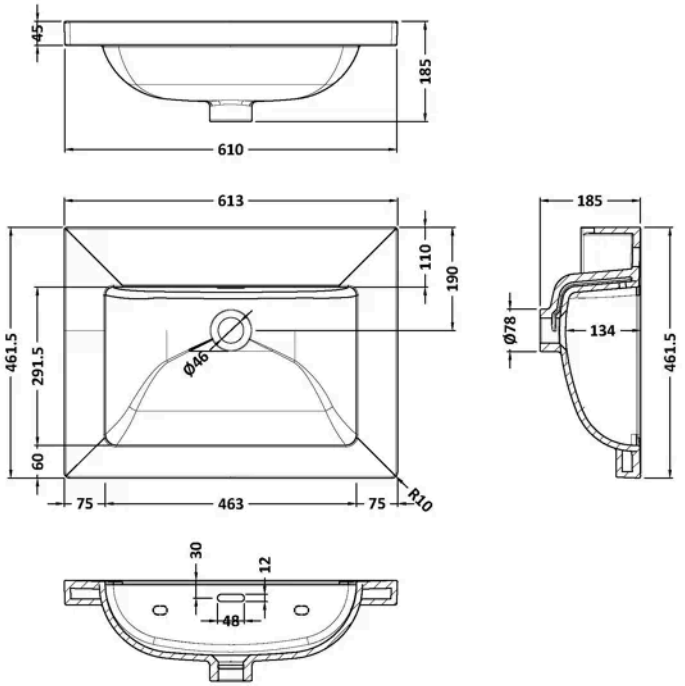


## Product Dimensions

| | |
|---|---|
| Product | 45 x 610 x 460mm (H x W x D) |
| Packaged | 490 x 650 x 220mm (H x W x D) |
| Nett Weight | 17 kg |
| Packaged Weight | 17 kg |

## Packaging Details

| | |
|---|---|
| Box Qty | 1 |
| Label Size (mm) | 100 x 50 |
| Label Colour | White |
| Label Qty | 2.0000 |

## Product Details

| | |
|---|---|
| Country of Origin | United Arab Emirates |
| Product Material | Fireclay |
| Colour/Finish | White |
| Style | Contemporary |
| Fixings Included | No |
| Bottle Trap Included | No |
| Ce Certified | Yes |
| Inner Bowl Depth | 292 mm |
| Inner Bowl Height | 135 mm |
| Inner Bowl Width | 463 mm |
| No. Of Tapholes | No Tapholes |
| Number Of Bowls | 1 |
| Overflow Cover Included | No |
| Overflow Included | Yes |
| Tap Included | No |
| Waste Included | No |

© ROXOR Group