Sales Code: HE191B

Barcode: 5056883762837

Brand: Synergy

Description: Synergy Henbury Satin White 500mm Wall Hung 1 Drawer Unit with Classic Basin 3 Tap Hole



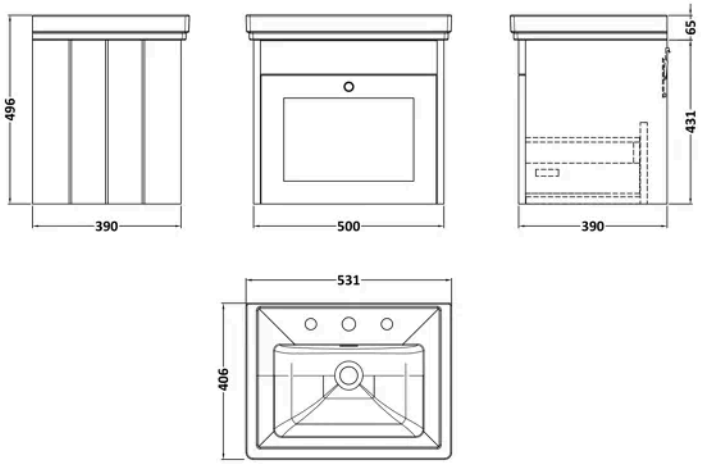

Product Dimensions

Product	496 x 531 x 406mm (H x W x D)
Packaged	465 x 525 x 415mm (H x W x D)
Nett Weight	29.2 kg
Packaged Weight	29.2 kg

Product Details

Country of Origin	China
Product Material	Mfc Painted Matt
Colour/Finish	Satin White
Mount Type	Wall Hung
Style	Traditional
Handle Type	Knob
Construction Method	Cam & Wood Dowel
Construction Type	Rigid
Fascia Finish	Mfc Painted Matt
Handles Included	Yes
Inner Bowl Height	136 mm
Leg Set Included	No
Material Thickness	18 mm
No. Drawers	1
No. Of Tapholes	3
Number Of Bowls	1
Overflow Cover Included	Yes
Overflow Included	Yes
Tap Included	No
Waste Included	No

© ROXOR Group

Sales Code: SY-HEN500CQ2 **Barcode:** 5056474588167 **Brand:** Synergy **Description:** Synergy Henbury 500mm 3 Tap Hole Traditional Fireclay Basin



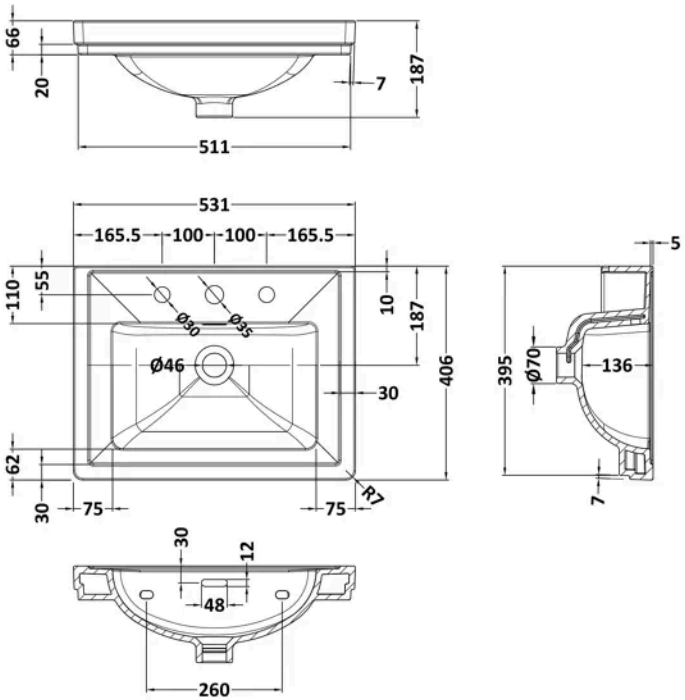

Product Dimensions

Product	187 x 531 x 406mm (H x W x D)
Packaged	430 x 550 x 220mm (H x W x D)
Nett Weight	13.5 kg
Packaged Weight	13.5 kg

Packaging Details

Box Qty	1

Product Details

Country of Origin	United Arab Emirates
Product Material	Fireclay
Colour/Finish	White
Style	Contemporary
Ce Certified	Yes
Inner Bowl Height	136 mm
No. Of Tapholes	3
Number Of Bowls	1
Overflow Included	Yes
Tap Included	No
Waste Included	No

© ROXOR Group

Sales Code: SY-HEN53-SW **Barcode:** 5056474587764 **Brand:** Synergy **Description:** Synergy Henbury 500mm Satin White 1 Drawer Wall Hung Vanity



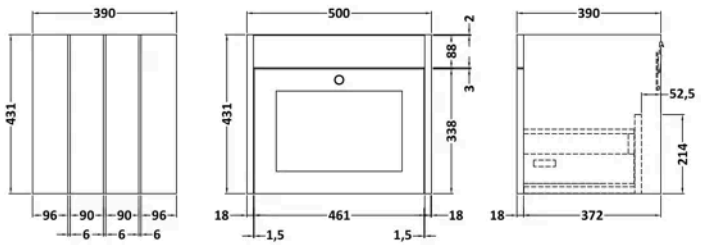

Product Dimensions

Product	431 x 500 x 390mm (H x W x D)
Packaged	465 x 525 x 415mm (H x W x D)
Nett Weight	15.2 kg
Packaged Weight	15.7 kg

Packaging Details

Box Qty	1

Product Details

Country of Origin	China
Product Material	Mfc Painted Matt
Colour/Finish	Satin White
Mount Type	Wall Hung
Style	Traditional
Handle Type	Knob
Construction Method	Cam & Wood Dowel
Construction Type	Rigid
Drawer Type	80mm High Metal S/C Inc Gallery
Fascia Finish	Mdf Painted Matt
Handles Included	Yes
Material Thickness	16 mm
No. Drawers	1
Waste Shroud	Yes

© ROXOR Group