Sales Code: HE1494Q **Barcode:** 5056883763537 **Brand:** Synergy **Description:** Synergy Henbury Soft Black 600mm Wall Hung 1 Drawer Unit with Stone Basin 1 Tap Hole



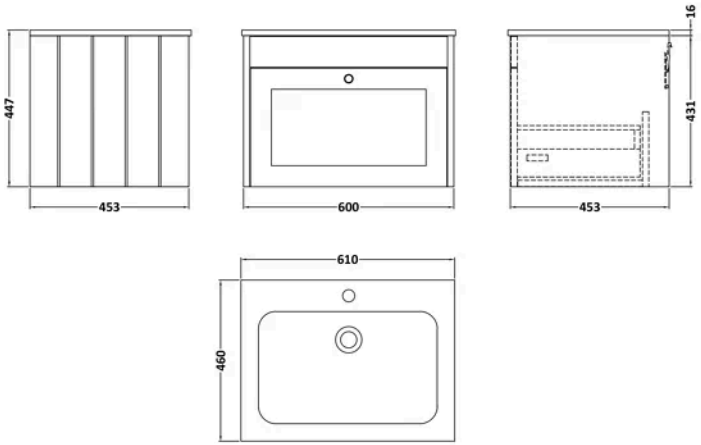

Product Dimensions

Product	816 x 610 x 460mm (H x W x D)
Packaged	465 x 625 x 480mm (H x W x D)
Nett Weight	33.5 kg
Packaged Weight	33.5 kg

Product Details

Country of Origin	China
Product Material	Mfc Painted Matt,Stone
Colour/Finish	Soft Black
Mount Type	Wall Hung
Style	Traditional
Handle Type	Knob
Construction Method	Cam & Wood Dowel
Construction Type	Rigid
Fascia Finish	Mfc Painted Matt
Handles Included	Yes
Inner Bowl Height	128 mm
Leg Set Included	No
Material Thickness	18 mm
No. Drawers	1
No. Of Tapholes	1
Number Of Bowls	1
Overflow Cover Included	Yes
Overflow Included	Yes
Tap Included	No
Waste Included	No

© ROXOR Group

Sales Code: SY-HEN54-BL **Barcode:** 5056474587856 **Brand:** Synergy **Description:** Synergy Henbury 600mm Soft Black Satin Soft Black 1 Drawer Wall Hung Vanity



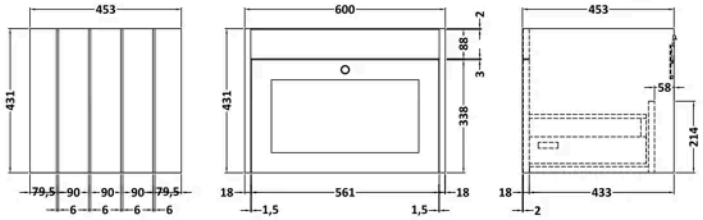

Product Dimensions

Product	431 x 600 x 453mm (H x W x D)
Packaged	465 x 625 x 480mm (H x W x D)
Nett Weight	19 kg
Packaged Weight	19.5 kg

Packaging Details

Box Qty	1

Product Details

Country of Origin	China
Product Material	Mfc Painted Matt
Colour/Finish	Soft Black
Mount Type	Wall Hung
Style	Traditional
Handle Type	Knob
Construction Method	Cam & Wood Dowel
Construction Type	Rigid
Drawer Type	80mm High Metal S/C Inc Gallery
Fascia Finish	Mdf Painted Matt
Handles Included	Yes
Material Thickness	16 mm
No. Drawers	1
Waste Shroud	Yes

© ROXOR Group

Sales Code: SY-HEN600CM **Barcode:** 5056474588075 **Brand:** Synergy **Description:** Synergy Henbury 600mm 1 Tap Hole Carrera Marble Stone Furniture Basin



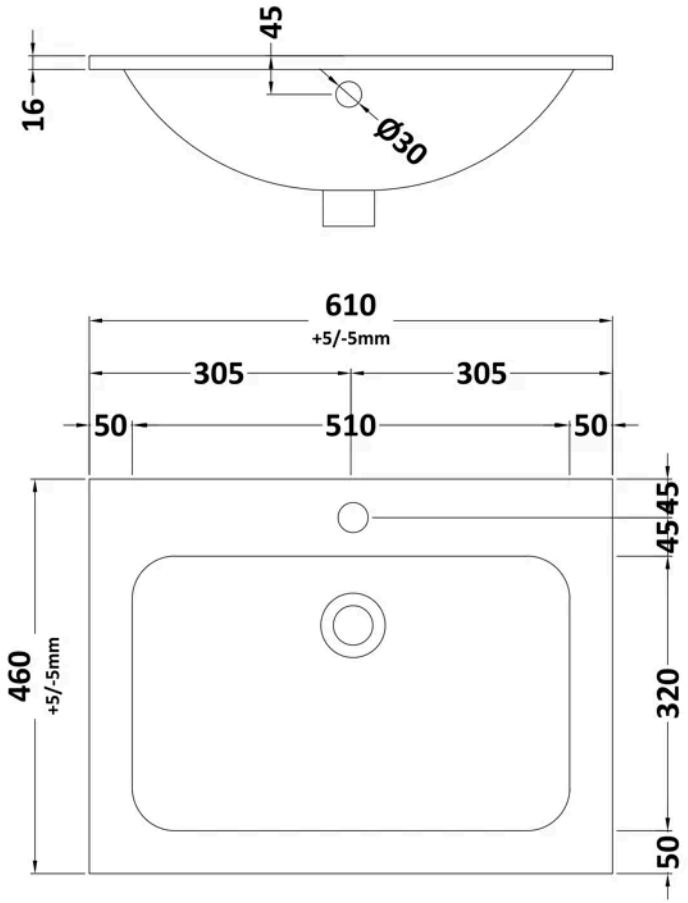

Product Dimensions

Product	610 x 460mm (W x D)
Packaged	200 x 675 x 530mm (H x W x D)
Nett Weight	13.5 kg
Packaged Weight	14 kg

Packaging Details

Box Qty	1

Product Details

Country of Origin	China
Product Material	Stone
Colour/Finish	Carrera Marble
Style	Contemporary
Bottle Trap Included	No
Ce Certified	Yes
Inner Bowl Depth	320 mm
Inner Bowl Height	128 mm
Inner Bowl Width	510 mm
No. Of Tapholes	1
Number Of Bowls	1
Overflow Cover Included	Yes
Overflow Included	Yes
Tap Included	No
Waste Included	No

© ROXOR Group