Sales Code: HE1425E

Barcode: 5056883762004

Brand: Synergy

Description: Synergy Henbury Soft Black 600mm Floor Standing 2 Door Unit with Thin Edge Basin 1 Tap Hole



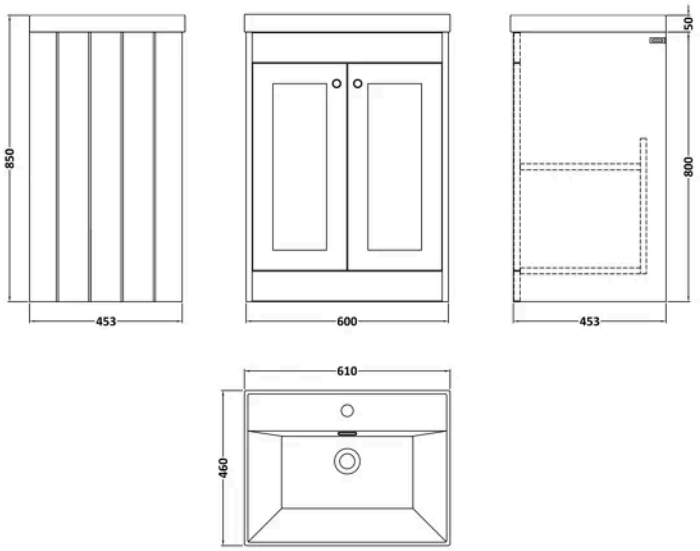

Product Dimensions

Product	481 x 610 x 460mm (H x W x D)
Packaged	835 x 625 x 480mm (H x W x D)
Nett Weight	39.8 kg
Packaged Weight	39.8 kg

Product Details

Country of Origin	China
Product Material	Mfc Painted Matt
Colour/Finish	Soft Black
Mount Type	Floor
Style	Traditional
Handle Type	Knob
Construction Method	Cam & Wood Dowel
Construction Type	Rigid
Fascia Finish	Mfc Painted Matt
Handles Included	Yes
Inner Bowl Height	160 mm
Leg Set Included	No
Material Thickness	18 mm
No. Doors	2
No. Of Tapholes	1
Number Of Bowls	1
Overflow Cover Included	Yes
Overflow Included	Yes
Tap Included	No
Waste Included	No
Waste Shroud	No

© ROXOR Group

Sales Code: SY-HEN51-BL **Barcode:** 5056474587702 **Brand:** Synergy **Description:** Synergy Henbury 600mm Soft Black Satin Soft Black 2 Door Floor Standing Vanity



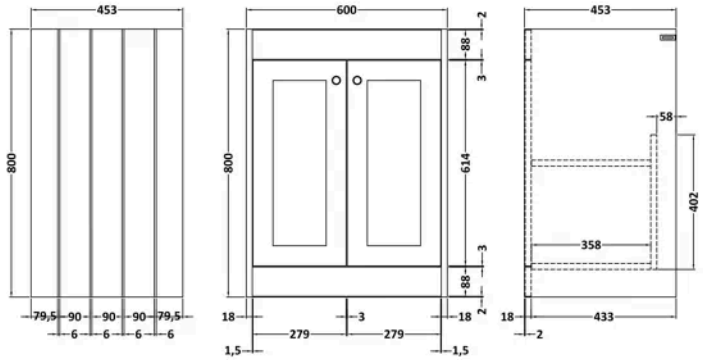

Product Dimensions

Product	800 x 600 x 453mm (H x W x D)
Packaged	835 x 625 x 480mm (H x W x D)
Nett Weight	25.3 kg
Packaged Weight	25.8 kg

Packaging Details

Box Qty	1

Product Details

Country of Origin	China
Product Material	Mfc Painted Matt
Colour/Finish	Soft Black
Mount Type	Floor
Style	Traditional
Handle Type	Knob
Construction Method	Cam & Wood Dowel
Construction Type	Rigid
Fascia Finish	Mdf Painted Matt
Handles Included	Yes
Material Thickness	16 mm
No. Doors	2
No. Shelves	1
Number Of Shelves	1

© ROXOR Group

Sales Code: SY-HEN600T **Barcode:** 5056474588129 **Brand:** Synergy **Description:** Synergy Henbury 1 Tap Hole 600mm Thin Edge Ceramic Basin



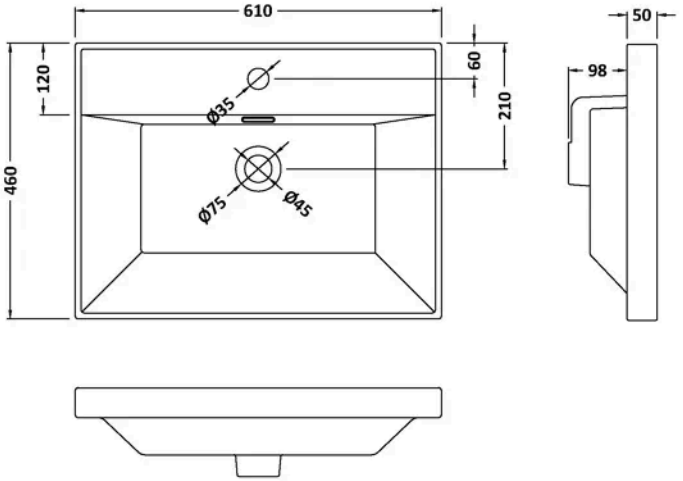

Product Dimensions

Product	148 x 610 x 460mm (H x W x D)
Packaged	170 x 625 x 480mm (H x W x D)
Nett Weight	13.5 kg
Packaged Weight	14 kg

Packaging Details

Box Qty	1
Label Size (mm)	100 x 50
Label Colour	White
Label Qty	2.0000

Product Details

Country of Origin	United Arab Emirates
Product Material	Vitreous China
Colour/Finish	White
Style	Contemporary
Fixings Included	No
Bottle Trap Included	No
Ce Certified	Yes
Inner Bowl Depth	270 mm
Inner Bowl Height	125 mm
Inner Bowl Width	600 mm
No. Of Tapholes	1
Number Of Bowls	1
Overflow Cover Included	No
Overflow Included	Yes
Tap Included	No
Waste Included	No

© ROXOR Group