Sales Code: HE1423H

Barcode: 5056883761380

Brand: Synergy

Description: Synergy Henbury Soft Black 500mm Floor Standing 2 Door Unit with Classic Basin No Tap Hole



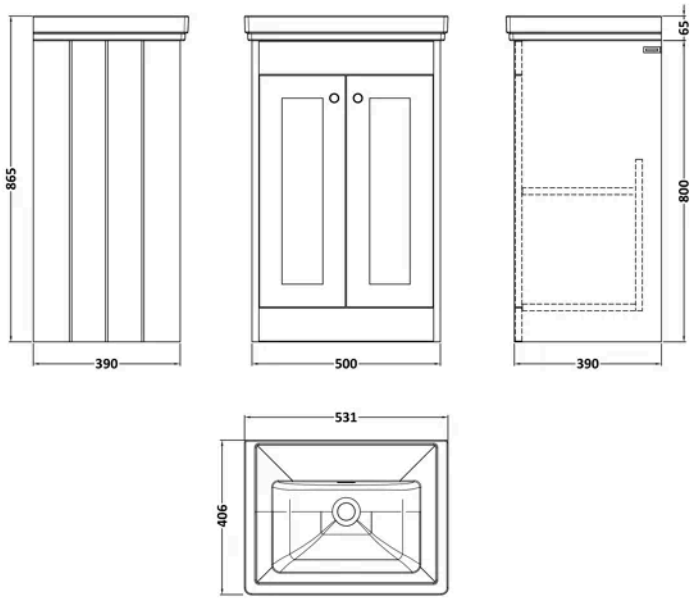

Product Dimensions

Product	496 x 531 x 406mm (H x W x D)
Packaged	835 x 525 x 415mm (H x W x D)
Nett Weight	35 kg
Packaged Weight	35 kg

Product Details

Country of Origin	China
Product Material	Mfc Painted Matt
Colour/Finish	Soft Black
Mount Type	Floor
Style	Traditional
Handle Type	Knob
Construction Method	Cam & Wood Dowel
Construction Type	Rigid
Fascia Finish	Mfc Painted Matt
Handles Included	Yes
Inner Bowl Height	136 mm
Leg Set Included	No
Material Thickness	18 mm
No. Doors	2
No. Of Tapholes	No Tapholes
Number Of Bowls	1
Overflow Cover Included	Yes
Overflow Included	Yes
Tap Included	No
Waste Included	No

© ROXOR Group

Sales Code: SY-HEN50-BL **Barcode:** 5056474587658 **Brand:** Synergy **Description:** Synergy Henbury 500mm Soft Black Satin Soft Black 2 Door Floor Standing Vanity Unit



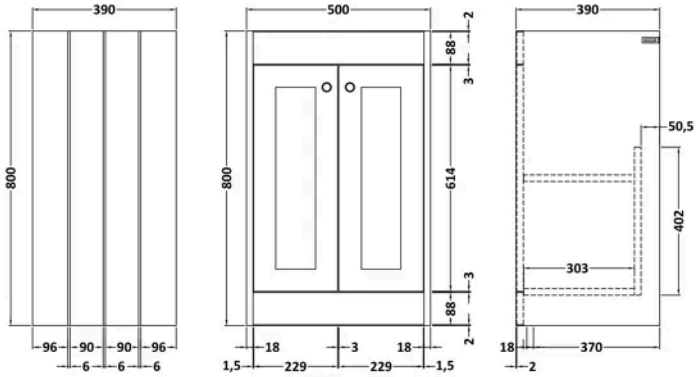

Product Dimensions

Product	800 x 500 x 390mm (H x W x D)
Packaged	835 x 525 x 415mm (H x W x D)
Nett Weight	21 kg
Packaged Weight	21.5 kg

Packaging Details

Box Qty	1

Product Details

Country of Origin	China
Product Material	Mfc Painted Matt
Colour/Finish	Soft Black
Mount Type	Floor
Style	Traditional
Handle Type	Knob
Construction Method	Cam & Wood Dowel
Construction Type	Rigid
Fascia Finish	Mdf Painted Matt
Handles Included	Yes
Material Thickness	16 mm
No. Doors	2
No. Shelves	1
Number Of Shelves	1

© ROXOR Group

Sales Code: SY-HEN500CQ0 **Barcode:** 5056474588143 **Brand:** Synergy **Description:** Synergy Henbury 500mm No Tap Hole Traditional Fireclay Basin



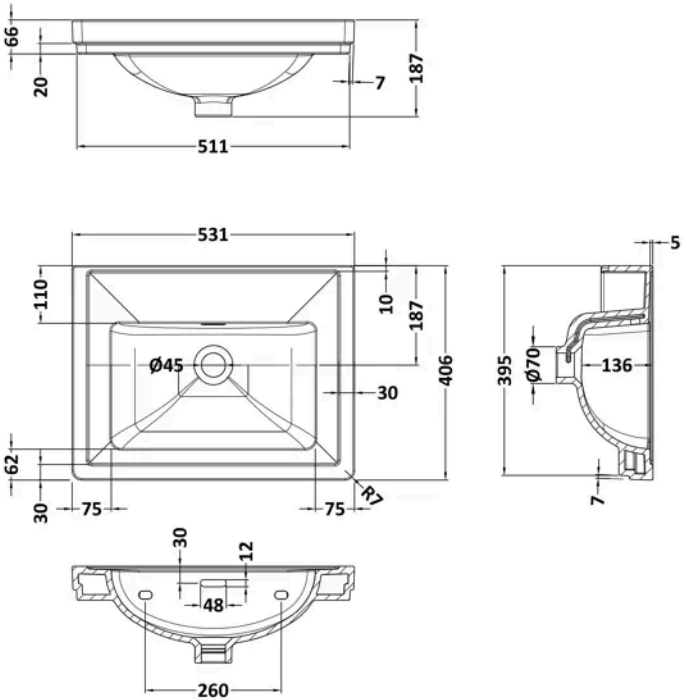

Product Dimensions

Product	187 x 531 x 406mm (H x W x D)
Packaged	430 x 550 x 220mm (H x W x D)
Nett Weight	13.5 kg
Packaged Weight	13.5 kg

Packaging Details

Box Qty	1

Product Details

Country of Origin	United Arab Emirates
Product Material	Fireclay
Colour/Finish	White
Style	Traditional
Ce Certified	Yes
Inner Bowl Height	136 mm
No. Of Tapholes	No Tapholes
Number Of Bowls	1
Overflow Included	Yes
Tap Included	No
Waste Included	No

© ROXOR Group