Sales Code: HCT005A **Barcode:** 5056678428986 **Brand:** nuie Lux **Description:** nuie lux Hunton 1 Tap Hole 640mm Ceramic Basin & Pedestal



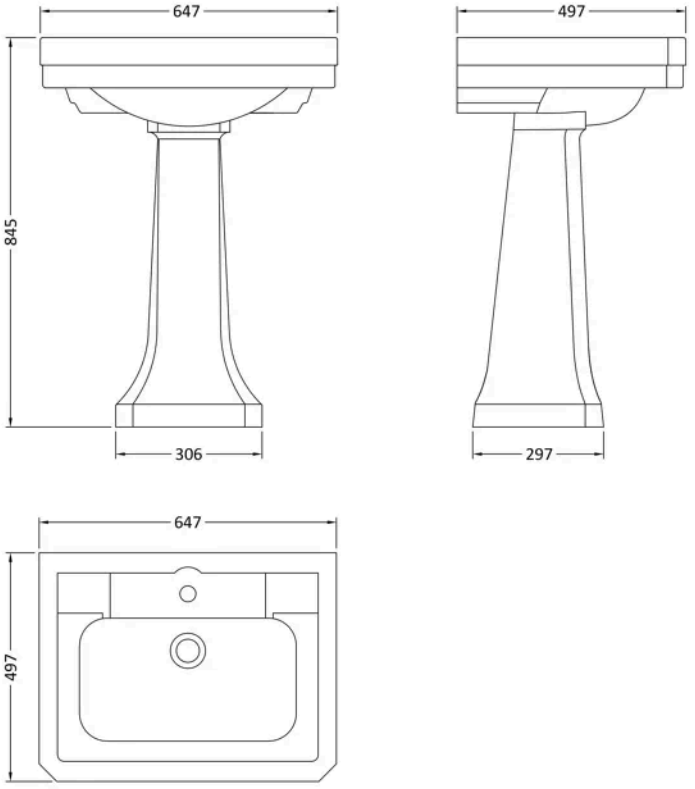

Product Dimensions

Product	845 x 647 x 497mm (H x W x D)
Packaged	690 x 650 x 500mm (H x W x D)
Nett Weight	31.3 kg
Packaged Weight	31.3 kg

Product Details

Country of Origin	China
Product Material	Vitreous China
Colour/Finish	White
Mount Type	Floor
Style	Traditional
Ce Certified	Yes
Inner Bowl Height	140 mm
No. Of Tapholes	1
Number Of Bowls	1
Overflow Included	Yes
Tap Included	No
Waste Included	No

© ROXOR Group

Sales Code: HUN102A **Barcode:** 5056817725129 **Brand:** nuie Lux **Description:** nuie lux Hunton 1 Tap Hole 640mm Ceramic Basin



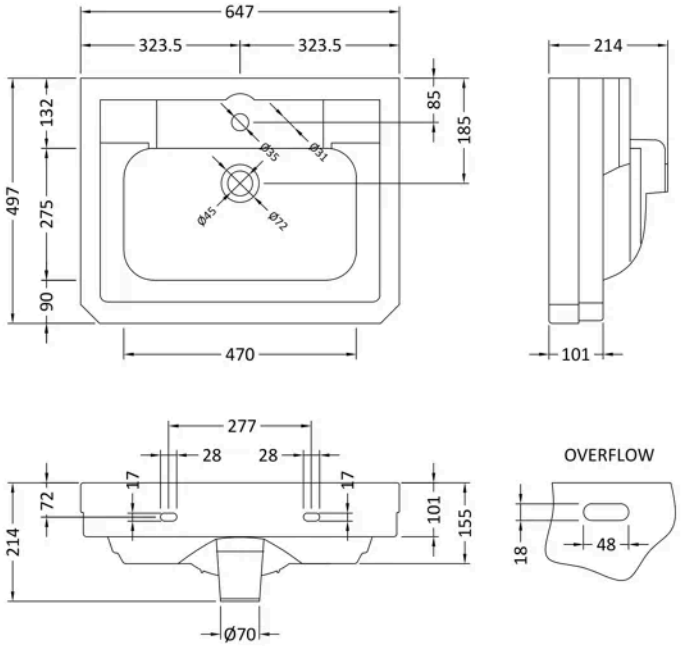

Product Dimensions

Product	220 x 640 x 500mm (H x W x D)
Packaged	220 x 650 x 500mm (H x W x D)
Nett Weight	17.9 kg
Packaged Weight	18.4 kg

Product Details

Country of Origin	China
Product Material	Ceramic
Colour/Finish	White
Mount Type	Pedestal
Style	Traditional
Ce Certified	Yes
Inner Bowl Height	140 mm
No. Of Tapholes	1
Number Of Bowls	1
Overflow Included	Yes
Tap Included	No
Waste Included	No

© ROXOR Group

Sales Code: HUN103 **Barcode:** 5056817725150 **Brand:** nuie Lux **Description:** nuie lux Hunton White Traditional Full Pedestal for use with 640mm Basin



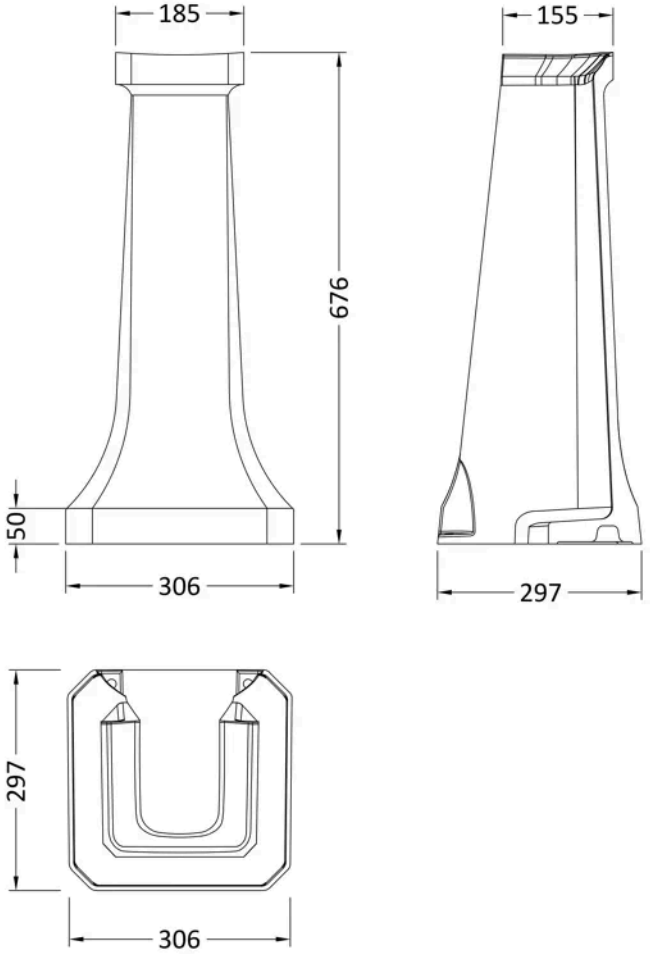

Product Dimensions

Product	685 x 260 x 265mm (H x W x D)
Packaged	690 x 315 x 315mm (H x W x D)
Nett Weight	12.4 kg
Packaged Weight	12.9 kg

Product Details

Country of Origin	China
Product Material	Ceramic
Colour/Finish	White
Mount Type	Floor
Style	Traditional
Ce Certified	Yes

© ROXOR Group