Sales Code: HCT004 **Barcode:** 5056678428948 **Brand:** nuie Lux **Description:** nuie lux Hunton 2 Tap Hole 545mm Ceramic Basin & Pedestal



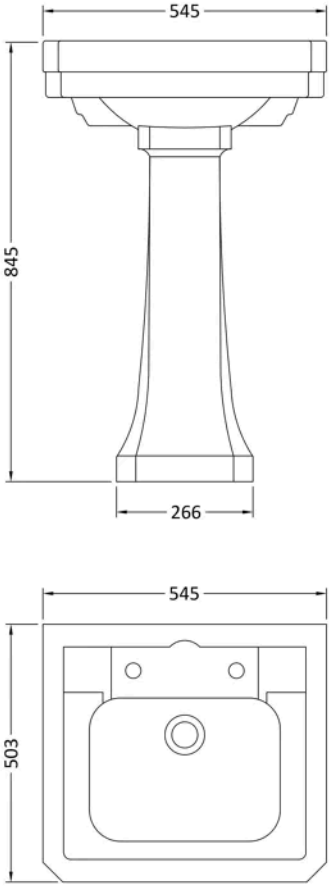

Product Dimensions

Product	845 x 545 x 503mm (H x W x D)
Packaged	690 x 550 x 500mm (H x W x D)
Nett Weight	27.4 kg
Packaged Weight	27.4 kg

Product Details

Country of Origin	China
Product Material	Vitreous China
Colour/Finish	White
Mount Type	Floor
Style	Traditional
Ce Certified	Yes
Inner Bowl Height	140 mm
No. Of Tapholes	2
Number Of Bowls	1
Overflow Included	Yes
Tap Included	No
Waste Included	No

© ROXOR Group

Sales Code: HUN104 **Barcode:** 5056817725174 **Brand:** nuie Lux **Description:** nuie lux Hunton 2 Tap Hole 540mm Ceramic Basin



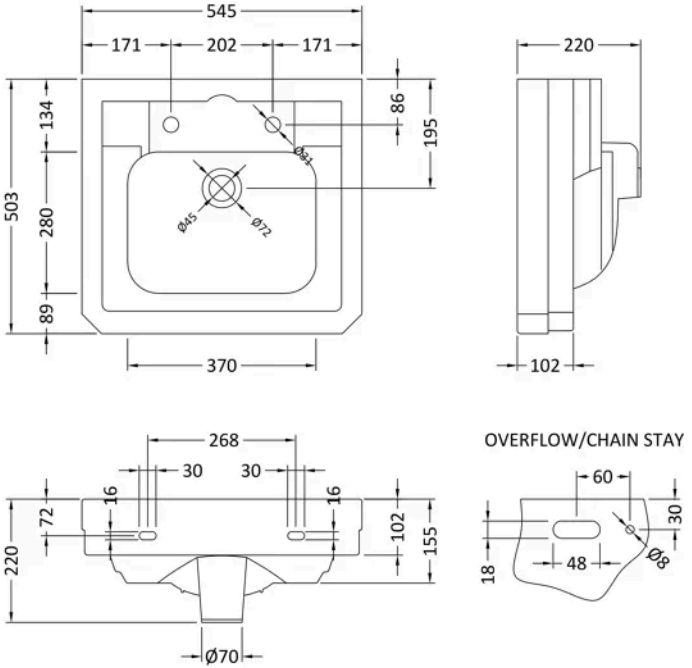

Product Dimensions

Product	220 x 540 x 500mm (H x W x D)
Packaged	220 x 540 x 500mm (H x W x D)
Nett Weight	14 kg
Packaged Weight	14.5 kg

Product Details

Country of Origin	China
Product Material	Ceramic
Colour/Finish	White
Mount Type	Pedestal
Style	Traditional
Ce Certified	Yes
Inner Bowl Height	140 mm
No. Of Tapholes	2
Number Of Bowls	1
Overflow Included	Yes
Tap Included	No
Waste Included	No

© ROXOR Group

Sales Code: HUN113 **Barcode:** 5056817725198 **Brand:** nuie Lux **Description:** nuie lux Hunton White Traditional Full Pedestal for use with 540mm Basin



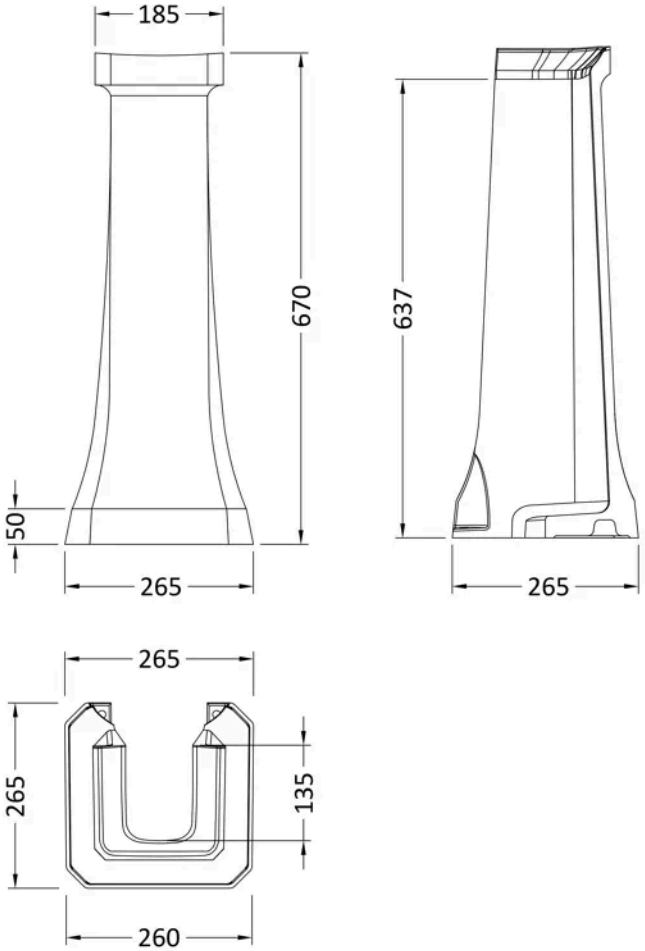

Product Dimensions

Product	690 x 315 x 315mm (H x W x D)
Packaged	685 x 265 x 260mm (H x W x D)
Nett Weight	12.4 kg
Packaged Weight	12.9 kg

Product Details

Country of Origin	China
Product Material	Ceramic
Colour/Finish	White
Mount Type	Floor
Style	Traditional
Ce Certified	Yes

© ROXOR Group