Sales Code: HCT001 **Barcode:** 5056678428917 **Brand:** nuie Lux **Description:** nuie lux Hunton Traditional Low Level Toilet With Cistern & Flush Pipe



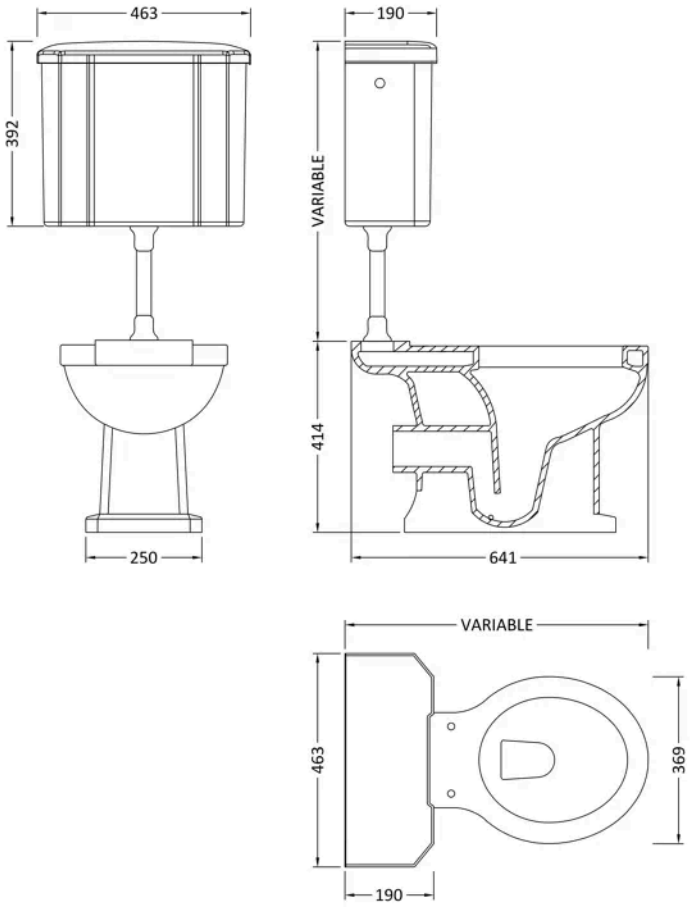

Product Dimensions

Product	463 x 641mm (W x D)
Packaged	482 x 392 x 650mm (H x W x D)
Nett Weight	32.31 kg
Packaged Weight	32.31 kg

Product Details

Country of Origin	China
Product Material	Vitreous China
Colour/Finish	Matt White
Style	Traditional
Ce Certified	Yes
Includes Seat	No
Pan Type	Open To Wall

© ROXOR Group

Sales Code: HUN171 **Barcode:** 5056817725068 **Brand:** nuie Lux **Description:** nuie lux Hunton Low/Medium Level Cistern



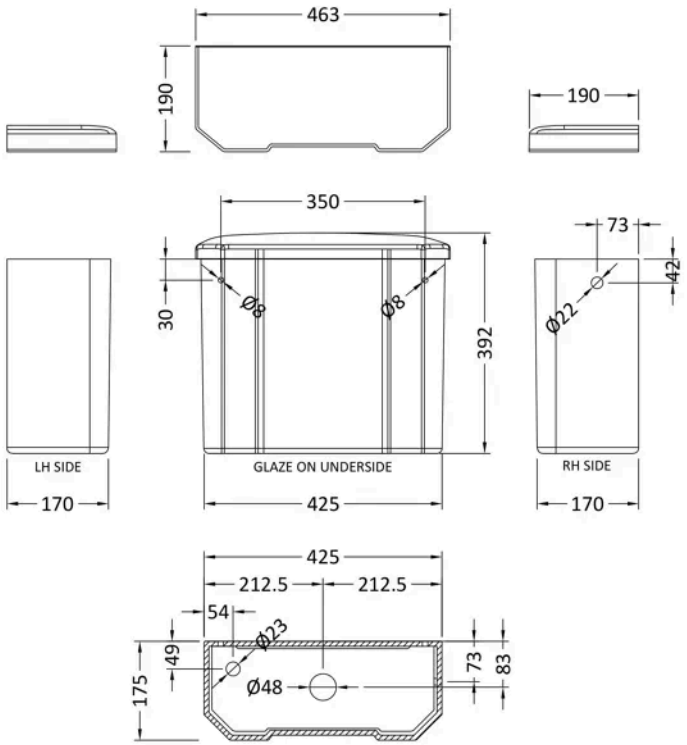

Product Dimensions

Product	387 x 460 x 190mm (H x W x D)
Packaged	387 x 460 x 190mm (H x W x D)
Nett Weight	14.5 kg
Packaged Weight	15 kg

Product Details

Country of Origin	China
Product Material	Vitreous China
Colour/Finish	White
Style	Traditional
Ce Certified	Yes
Cistern Fittings	Loose Single 6L
Cistern Lever Type	Ceramic / Chrome Plated
Flush Operating Type	Lever

© ROXOR Group

Sales Code: HUN870 **Barcode:** 5056817725105 **Brand:** nuie Lux **Description:** nuie lux Hunton Traditional Toilet Pan Hunton High/Low



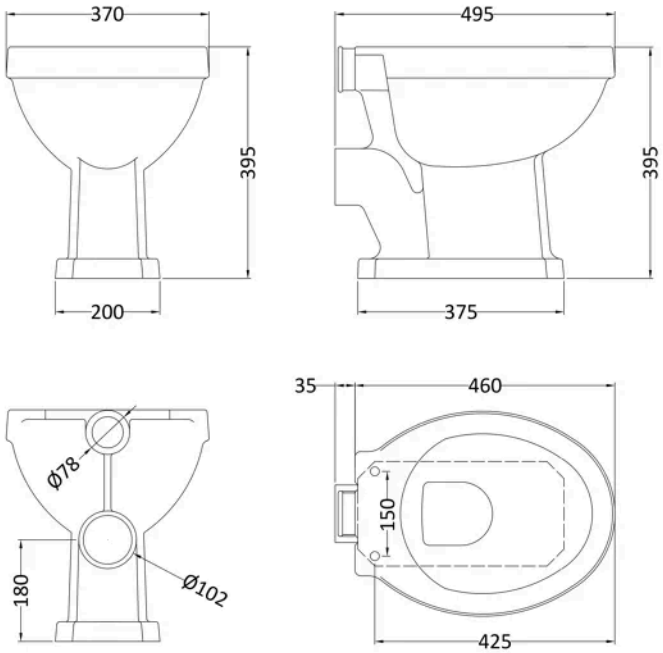

Product Dimensions

Product	395 x 370 x 495mm (H x W x D)
Packaged	425 x 525 x 430mm (H x W x D)
Nett Weight	15.61 kg
Packaged Weight	16.5 kg

Packaging Details

Box Qty	1

Product Details

Country of Origin	China
Product Material	Vitreous China
Colour/Finish	White
Style	Traditional
Ce Certified	Yes
Includes Seat	No
Pan Type	Open To Wall

© ROXOR Group

Sales Code: LXFA302 **Barcode:** 5056817728298 **Brand:** nuie Lux **Description:** nuie lux Chrome Low Level Flush Pipe Pack



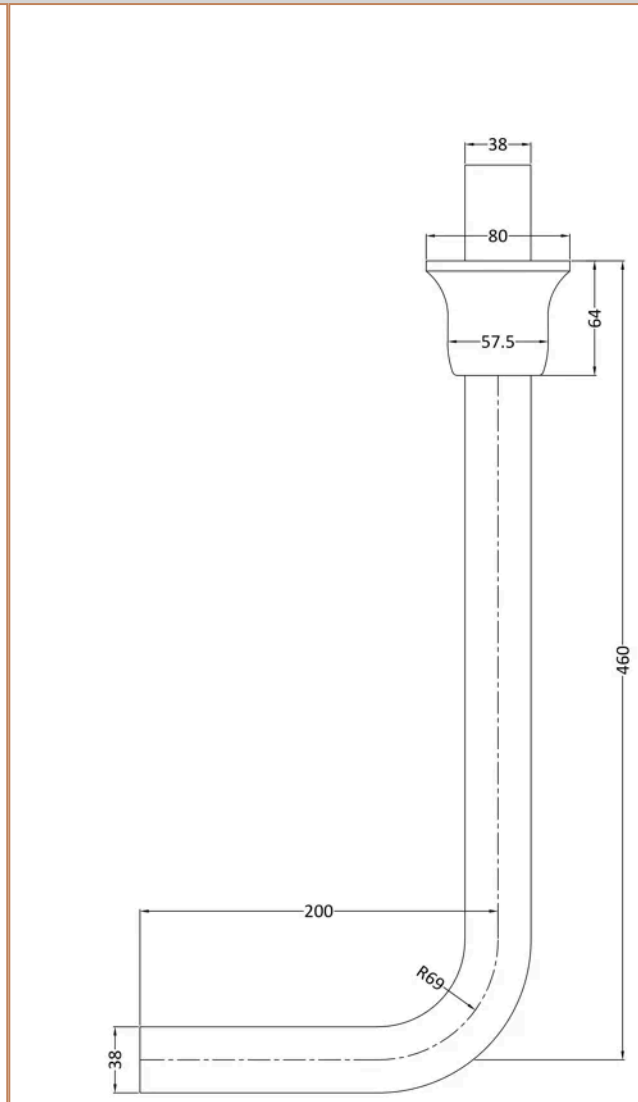

Product Dimensions

Product	480 x 81 x 220mm (H x W x D)
Packaged	75 x 200 x 540mm (H x W x D)
Nett Weight	0.7 kg
Packaged Weight	0.81 kg

Packaging Details

Box Qty	1
Label Size (mm)	50 x 100
Label Colour	White
Label Qty	2.0000

Product Details

Country of Origin	China
Product Material	Brass
Colour/Finish	Chrome
Style	Traditional
Fixings Included	No
Product Diameter	38 mm

© ROXOR Group