Sales Code: HAR102L

Barcode: 5056883744765

Brand: nuie Lux

Description: nuie lux Hartwell Moon White 1000mm 2 Drawer 1 Door Wall Hung Left Hand Vanity Unit With Polymarble Basin



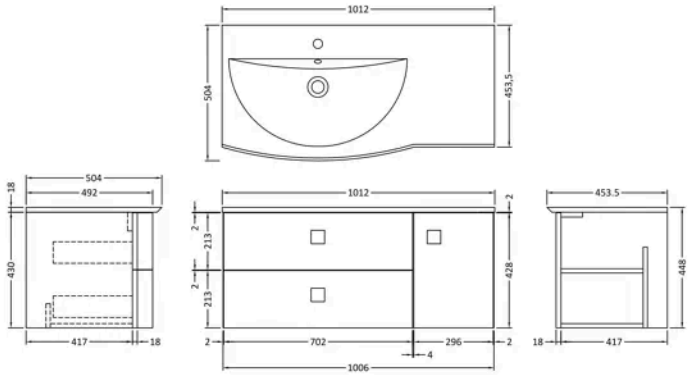

Product Dimensions

Product	448 x 1012 x 504mm (H x W x D)
Packaged	550 x 550 x 550mm (H x W x D)
Nett Weight	49.5 kg
Packaged Weight	49.5 kg

Product Details

Country of Origin	Ukraine
Product Material	Mfc Smooth Matt
Colour/Finish	Moon White
Mount Type	Wall Hung
Style	Contemporary
Handle Type	Square
Construction Method	Cam & Wood Dowel
Construction Type	Rigid
Drawer Type	80mm High Metal Soft-close
Fascia Finish	Mdf Vinyl Smooth Matt
Fsc Certified	Yes
Handles Included	Yes
Inner Bowl Depth	310 mm
Inner Bowl Height	105 mm
Inner Bowl Width	580 mm
Leg Set Included	No
Material Thickness	18 mm
No. Doors	1
No. Drawers	2
No. Of Tapholes	1
Number Of Bowls	1
Overflow Included	Yes
Tap Included	No
Waste Included	No
Waste Shroud	Yes

© ROXOR Group

Sales Code: HAR160 **Barcode:** 5056883728475 **Brand:** nuie Lux **Description:** nuie lux Hartwell 305mm Moon White Wall Hung Cabinet

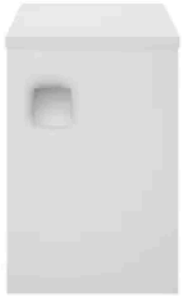

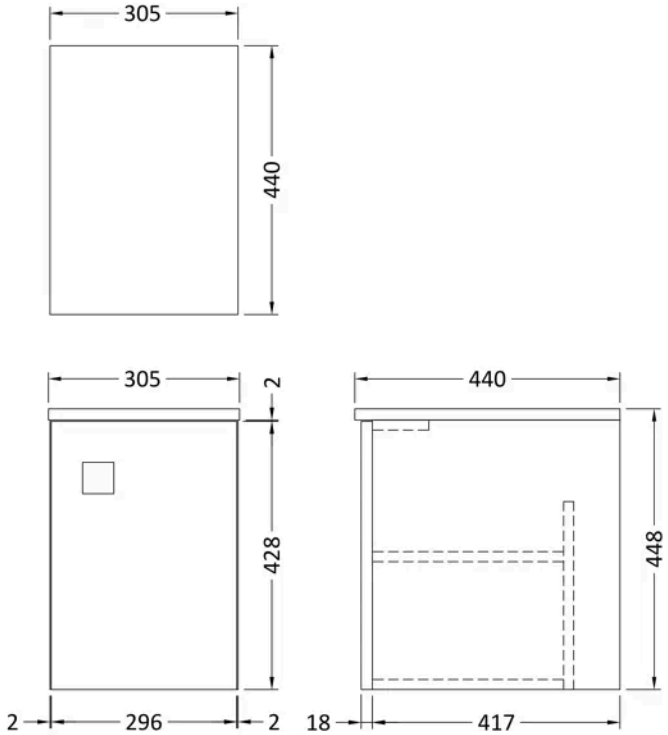

Product Dimensions

Product	448 x 305 x 440mm (H x W x D)
Packaged	450 x 320 x 425mm (H x W x D)
Nett Weight	14 kg
Packaged Weight	14 kg

Packaging Details

Box Qty	1

Product Details

Country of Origin	Ukraine
Product Material	Mfc Smooth Matt
Colour/Finish	Moon White
Mount Type	Wall Hung
Style	Contemporary
Handle Type	Square
Fixings Included	Yes
Construction Method	Cam & Wood Dowel
Construction Type	Rigid
Fascia Finish	Mdf Vinyl Smooth Matt
Fsc Certified	Yes
Handles Included	Yes
Leg Set Included	No
Material Thickness	18 mm
No. Doors	1

© ROXOR Group

Sales Code: HAR194 **Barcode:** 5056883728437 **Brand:** nuie Lux **Description:** nuie lux Hartwell 700mm Moon White 2 Drawer Wall Hung Vanity Unit



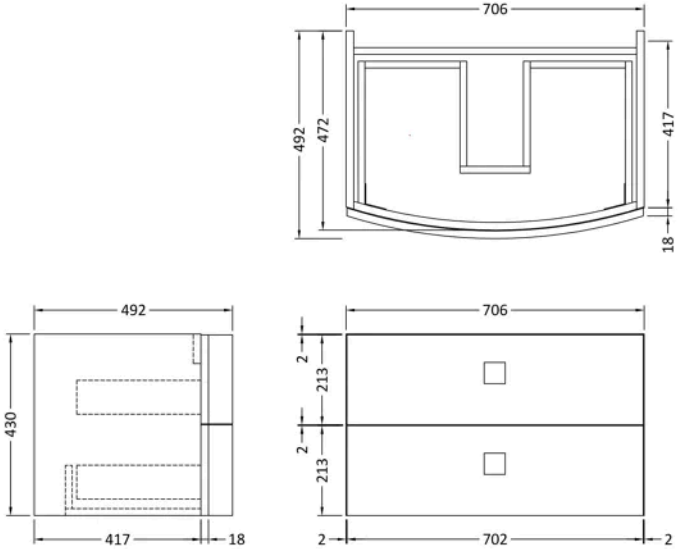

Product Dimensions

Product	430 x 706 x 492mm (H x W x D)
Packaged	500 x 700 x 470mm (H x W x D)
Nett Weight	22 kg
Packaged Weight	22 kg

Packaging Details

Box Qty	1

Product Details

Country of Origin	Ukraine
Product Material	Mfc Smooth Matt
Colour/Finish	Moon White
Mount Type	Wall Hung
Style	Contemporary
Construction Method	Cam & Wood Dowel
Construction Type	Rigid
Handles Included	Yes
Material Thickness	18 mm
No. Drawers	2

© ROXOR Group

Sales Code: LXPB093L **Barcode:** 5056883728574 **Brand:** nuie Lux **Description:** nuie lux Hartwell 1 Tap Hole 1012mm Polymarble Basin Left Hand



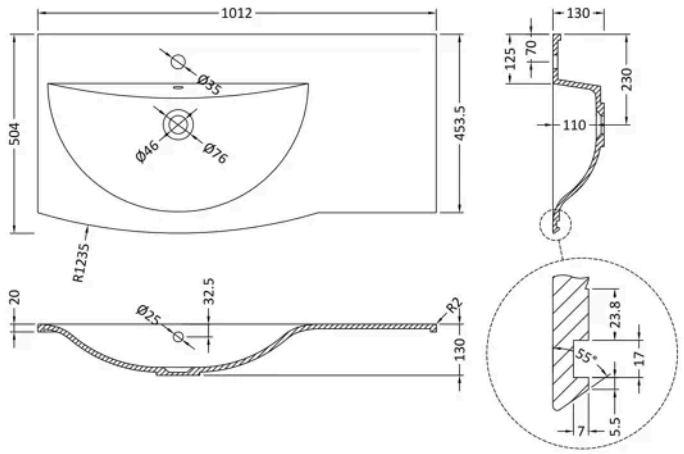

Product Dimensions

Product	130 x 1012 x 504mm (H x W x D)
Packaged	110 x 1012 x 504mm (H x W x D)
Nett Weight	13.5 kg
Packaged Weight	13.5 kg

Packaging Details

Box Qty	1

Product Details

Country of Origin	Poland
Product Material	Polymarble
Colour/Finish	White
Style	Contemporary
Inner Bowl Height	105 mm
No. Of Tapholes	1
Number Of Bowls	1

© ROXOR Group