Sales Code: HAR101 **Barcode:** 5056883744758 **Brand:** nuie Lux **Description:** nuie lux Hartwell Moon White 700mm 2 Drawer Wall Hung Vanity Unit With Basin



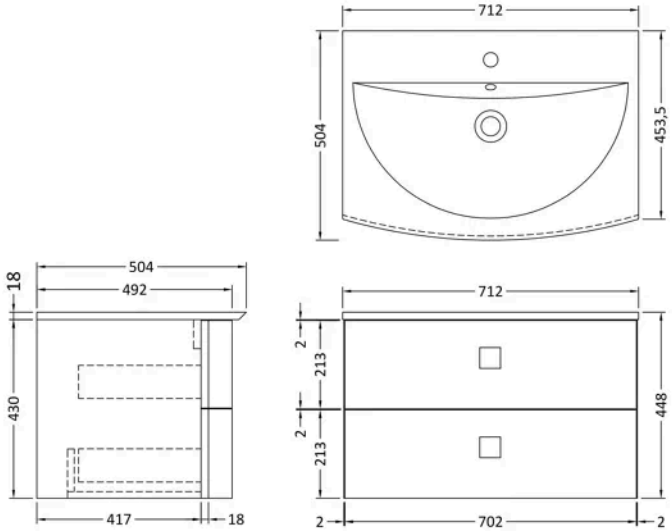

Product Dimensions

Product	448 x 712 x 504mm (H x W x D)
Packaged	550 x 550 x 550mm (H x W x D)
Nett Weight	32 kg
Packaged Weight	32 kg

Product Details

Country of Origin	Ukraine
Product Material	Mfc Smooth Matt
Colour/Finish	Moon White
Mount Type	Wall Hung
Style	Contemporary
Handle Type	Square
Construction Method	Cam & Wood Dowel
Construction Type	Rigid
Drawer Type	80mm High Metal Soft-close
Fascia Finish	Mdf Vinyl Smooth Matt
Fsc Certified	Yes
Handles Included	Yes
Inner Bowl Depth	295 mm
Inner Bowl Height	110 mm
Inner Bowl Width	570 mm
Leg Set Included	No
Material Thickness	18 mm
No. Drawers	2
No. Of Tapholes	1
Number Of Bowls	1
Overflow Included	Yes
Tap Included	No
Waste Included	No
Waste Shroud	Yes

© ROXOR Group

Sales Code: HAR194 **Barcode:** 5056883728437 **Brand:** nuie Lux **Description:** nuie lux Hartwell 700mm Moon White 2 Drawer Wall Hung Vanity Unit



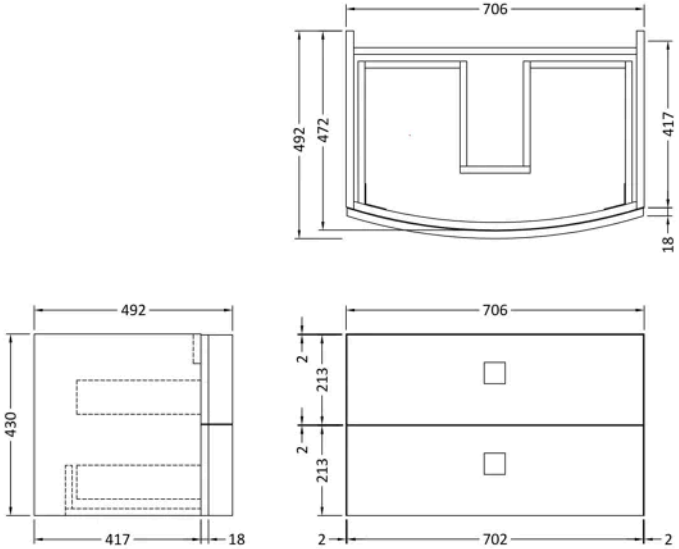

Product Dimensions

Product	430 x 706 x 492mm (H x W x D)
Packaged	500 x 700 x 470mm (H x W x D)
Nett Weight	22 kg
Packaged Weight	22 kg

Packaging Details

Box Qty	1

Product Details

Country of Origin	Ukraine
Product Material	Mfc Smooth Matt
Colour/Finish	Moon White
Mount Type	Wall Hung
Style	Contemporary
Construction Method	Cam & Wood Dowel
Construction Type	Rigid
Handles Included	Yes
Material Thickness	18 mm
No. Drawers	2

© ROXOR Group

Sales Code: LXPB073 **Barcode:** 5056883728567 **Brand:** nuie Lux **Description:** nuie lux Hartwell 1 Tap Hole 700mm Polymarble Basin



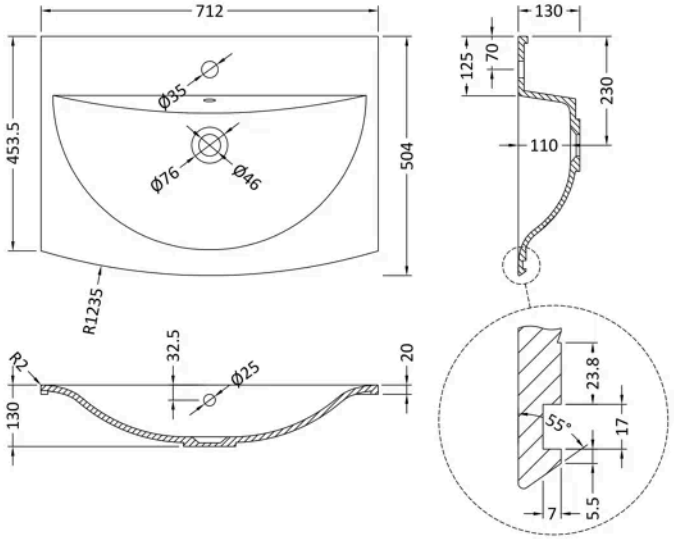

Product Dimensions

Product	130 x 712 x 504mm (H x W x D)
Packaged	110 x 712 x 506mm (H x W x D)
Nett Weight	10 kg
Packaged Weight	10 kg

Packaging Details

Box Qty	1

Product Details

Country of Origin	Poland
Product Material	Polymarble
Colour/Finish	White
Style	Contemporary
Inner Bowl Height	110 mm
No. Of Tapholes	1
Number Of Bowls	1

© ROXOR Group