**Sales Code:** HAL403 **Barcode:** 5056678445075 **Brand:** nuie Choice **Description:** nuie choice Halstatt Matt Black Bath Filler



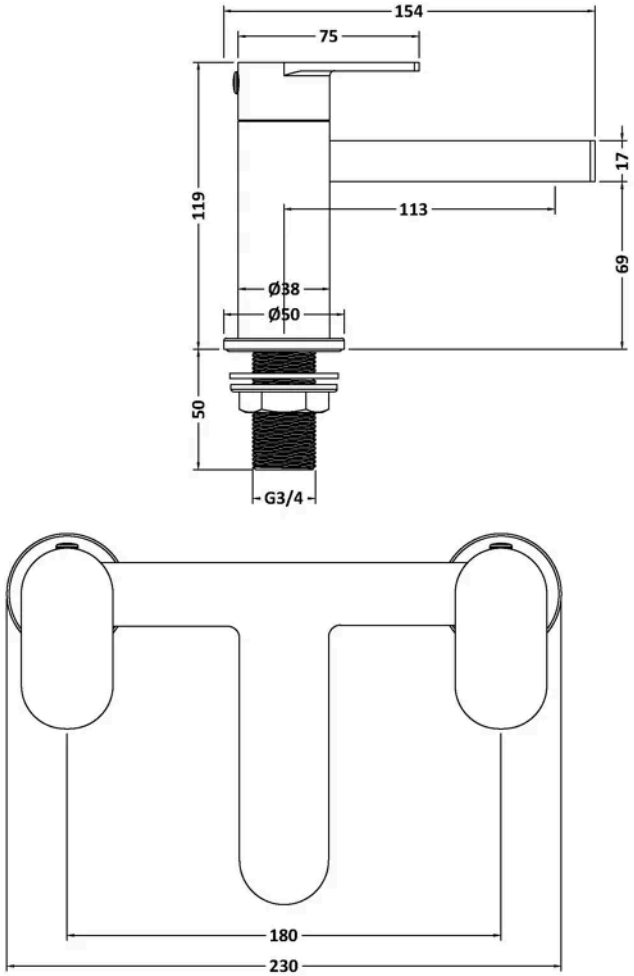


## Product Dimensions

| | |
|---|---|
| Product | 119 x 230 x 154 x 119mm (H x W x D x L) |
| Packaged | 160 x 250 x 200mm (H x W x D) |
| Outer Box | 500 x 420 x 265mm (H x W x D) |
| Nett Weight | 1.4 kg |
| Packaged Weight | 1.6 kg |

## Packaging Details

| | |
|---|---|
| Box Qty | 1 |
| Label Size (mm) | 50 x 100 |
| Label Colour | White |
| Label Qty | 1.0000 |

## Product Details

| | |
|---|---|
| Country of Origin | China |
| Product Material | Brass |
| Control Type | Manual |
| WRAS Approved | No |
| Valve/Cartridge Type | 1/4 Turn Ceramic Disc |
| Colour/Finish | Matt Black |
| Mount Type | Deck |
| Style | Contemporary |
| Handle Type | Lever/Square |
| TMV2 Approved | No |
| TMV3 Approved | No |
| Handset Included | Yes |
| Min Operating Pressure | 1 Bar |
| Tap Spout Height | 69 mm |
| Tap Spout Projection | 113 mm |
| Valve / Cartridge Type | 1/4 Turn Ceramic Disc |
| Waste Included | No |

© ROXOR Group